INSTALLATION & USER'S MANUAL

Showline

SL BAND 300 RGBW LED Luminaires
SL BAND 300 TW LED Luminaires

IP20 Rated

PHILIPS

www.vari-lite.com

The material in this manual is for information purposes only and is subject to change without notice. Showline assumes no responsibility for any errors or omissions which may appear in this manual. For comments and suggestions regarding corrections and/or updates to this manual, please contact your nearest Showline office.

El contenido de este manual es solamente para información y está sujeto a cambios sin previo aviso. Showline no asume responsabilidad por errores o omisiones que puedan aparecer. Cualquier comentario, sugerencia o corrección con respecto a este manual, favor de dirijirlo a la oficina de Showline más cercana.

Der Inhalt dieses Handbuches ist nur für Informationszwecke gedacht, Aenderungen sind vorbehalten. Showline uebernimmt keine Verantwortung für Fehler oder Irrtuemer, die in diesem Handbuch auftreten. Für Bemerkungen und Verbesserungsvorschlaege oder Vorschlaege in Bezug auf Korrekturen und/oder Aktualisierungen in diesem Handbuch, moechten wir Sie bitten, Kontakt mit der naechsten Showline-Niederlassung aufzunehmen.

Le matériel décrit dans ce manuel est pour information seulement et est sujet à changements sans préavis. La compagnie Showline n'assume aucune responsibilité sur toute erreur ou ommission inscrite dans ce manuel. Pour tous commentaires ou suggestions concernant des corrections et/ou les mises à jour de ce manuel, veuillez s'il vous plait contacter le bureau de Showline le plus proche.

Note: Information contained in this document may not be duplicated in full or in part by any person without prior written approval of Showline. Its sole purpose is to provide the user with conceptual information on the equipment mentioned. The use of this document for all other purposes is specifically prohibited.

Document Number: 24-004-3401-01

Version as of: 28, January, 2013

SL BAND 300 RGBW / SL BAND 300 TW LED Luminaires Installation & User's Manual

©2013 Philips Group. All rights reserved.

IMPORTANT INFORMATION

Warnings and Notices

When using electrical equipment, basic safety precautions should always be followed including the following:

a. **READ AND FOLLOW ALL SAFETY INSTRUCTIONS**.
b. Do not use outdoors.
c. Do not mount near gas or electric heaters.
d. Equipment should be mounted in locations and at heights where it will not readily be subjected to tampering by unauthorized personnel.
e. The use of accessory equipment not recommended by the manufacturer may cause an unsafe condition.
f. Do not use this equipment for other than intended use.
g. Refer service to qualified personnel.

SAVE THESE INSTRUCTIONS.

WARNING: You must have access to a main circuit breaker or other power disconnect device before installing any wiring. Be sure that power is disconnected by removing fuses or turning the main circuit breaker off before installation. Installing the device with power on may expose you to dangerous voltages and damage the device. A qualified electrician must perform this installation.

WARNING: Refer to National Electrical Code® and local codes for cable specifications. Failure to use proper cable can result in damage to equipment or danger to personnel.

WARNING: This equipment is intended for installation in accordance with the National Electric Code® and local regulations. It is also intended for installation in indoor applications only. Before any electrical work is performed, disconnect power at the circuit breaker or remove the fuse to avoid shock or damage to the control. It is recommended that a qualified electrician perform this installation.

Additional Resources for DMX512

For more information on installing DMX512 control systems, the following publication is available for purchase from the United States Institute for Theatre Technology (USITT), "Recommended Practice for DMX512: A Guide for Users and Installers, 2nd edition" (ISBN: 9780955703522). USITT Contact Information:

USITT
315 South Crouse Avenue, Suite 200
Syracuse, NY 13210-1844
Phone: 1.800.938.7488 or 1.315.463.6463
www.usitt.org

Showline Limited Two-Year Warranty

Showline offers a Two-year limited warranty of its luminaires against defects in materials or workmanship from the date of delivery. A copy of Showline two-year limited warranty containing specific terms and conditions can be obtained by contacting your local Showline office.

TABLE OF CONTENTS

Showline Offices ..... Inside Front Cover

IMPORTANT INFORMATION

Warnings and Notices 1

Additional Resources for DMX512 1

Showline Limited Two-Year Warranty 1

TABLE OF CONTENTS

PREFACE

About this Manual 3

Included Items 3

Accessories 3

SL BAND 300 RGBW / SL BAND 300 TW LED Luminaire Accessories 3

SL BAND 300 LED LUMINAIRES OVERVIEW

SL BAND 300 RGBW / SL BAND 300 TW LED Luminaire Components 4

Common Luminaire Components 4

LCD Display / Menu System 4

INSTALLATION AND SET UP

Power Requirements 5

AC Power Operation 5

Connecting Power 5

Connecting SL BAND 300 RGBW / SL BAND 300 TW LED Luminaires to AC Power 6

Connecting to the DMX512 Network 7

Mounting Luminaire 8

OPERATION AND PROGRAMMING

LCD Display and Menu System 9

SL BAND 300 RGBW Luminaires 9

SL BAND 300 TW Luminaires 9

LCD Display and Menu System Operation 10

SL BAND 300 RGBW LED Luminaire Menu Tree 11

SL BAND 300 TW LED Luminaire Menu Tree 12

Quick Selection Buttons 13

Edit a Preset Button 13

Edit a Chase Button (RGBW models only) 13

DMX Address Button 13

Dimming Curve Selection 14

Master / Slave Operational Mode 15

DMX CONTROL

SL BAND 300 RGBW LED Luminaire DMX Mapping 16

16-Bit Mode 16

8-Bit Mode 19

HSIC Mode 22

SL BAND 300 TW LED Luminaire DMX Mapping 23

16-Bit Mode (CCT) 23

16-Bit Mode (WW + CW) 24

8-Bit Mode (CCT) 25

8-Bit Mode (WW + CW) 26

DMX Timing Channel Detail 27

RDM PARAMETER IDS

SL BAND 300 RGBW LED Luminaire RDM Parameter IDs 33

SL BAND 300 TW LED Luminaire RDM Parameter IDs 36

CLEANING AND CARE

Special Cleaning and Care Instructions 39

Front Lens Cleaning 39

Service and Maintenance 39

Accessories 40

TECHNICAL SPECIFICATIONS

Operational Specifications 41

Luminaire Dimensions 41

Showline

PREFACE

1. About this Manual

The document provides installation and operation instructions for the following products:

- SL BAND 300 RGBW LED Luminaire (color mixing) - white or black housing (depending on model ordered)
- SL BAND 300 TW LED Luminaire (tunable white) - white or black housing (depending on model ordered)

Please read all instructions before installing or using this product. *Retain this manual for future reference*. Additional product information and descriptions may be found on the product specification sheet.

Note: The SL BAND 300 RGBW / SL BAND 300 TW LED Luminaires are universal voltage 100 to 240 VAC (auto-ranging).

2. Included Items

Each SL BAND 300 RGBW / SL BAND 300 TW LED Luminaire includes the following items:

- SL BAND 300 RGBW / SL BAND 300 TW LED Luminaire (white or black housing depending on model purchased)
- Removable Mount Assembly
- PC1BE - AC Power Input Cable (39 inches/1 meter), Powercon with Bare End*(**Note, user supplies and installs own AC input connector*)
- Installation and User's Manual(*this document*)

3. Accessories

Contact your Authorized Showline Dealer for price and availability of all accessories for SL BAND 300 RGBW / SL BAND 300 TW LED Luminaires.

SL BAND 300 RGBW / SL BAND 300 TW LED Luminaire Accessories

Part Number	Description
MEGACLAW	Mega Claw, Black, Anodized
SC	Molded Yoke C-Clamp
HC	Light Weight Half Coupler
82003	Safety Cable

SL BAND 300 LED LUMINAIRES OVERVIEW

1. SL BAND 300 RGBW / SL BAND 300 TW LED Luminaire Components

Common Luminaire Components

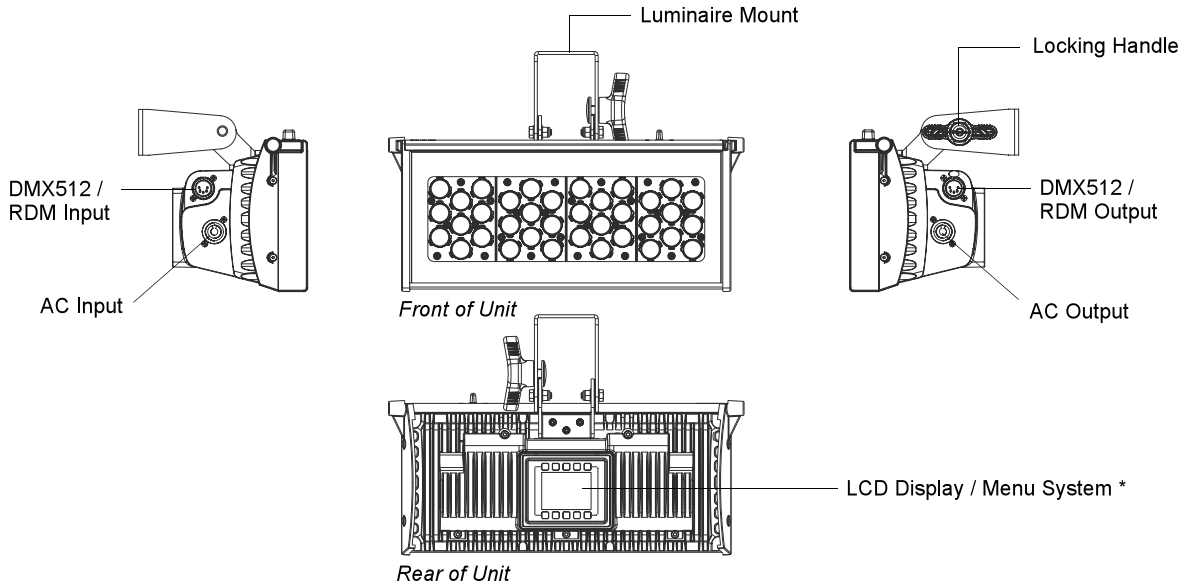

Figure 1: SL BAND 300 RGBW / SL BAND 300 TW LED Luminaire Common Components

LCD Display / Menu System

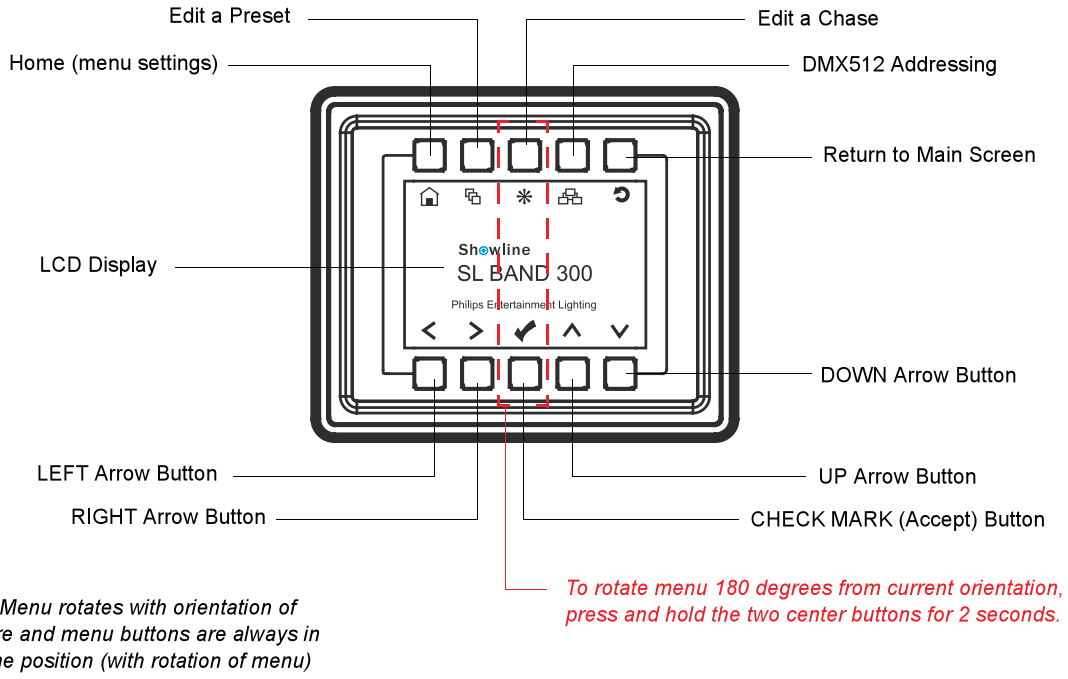

Figure 2: LCD Display & Menu System

Note: For Menu operation and programming details, refer to "LCD Display and Menu System" on page 9.

INSTALLATION AND SET UP

2. Power Requirements

The SL BAND 300 RGBW / SL BAND 300 TW LED Luminaires operate on AC input voltages from 100 to 240 VAC.

WARNING! SL BAND 300 RGBW / SL BAND 300 TW LED Luminaires do not contain an ON/OFF switch. Always disconnect power input cable to completely remove power from the luminaire when not in use.

AC Power Operation

When connected to an AC source, theunit operates on 100 to 240 volts AC (+/- 10%, auto-ranging). The luminaire contains an auto-ranging power supply.Each luminaire can draw up to 65 Watts.

WARNING! Maximum amount of fixtures that may be daisy-chained is (A) 25 units 100 ~ 120VAC or (B) 32 units 230 ~ 240VAC (10 Amps).

Table 1: SL BAND 300 RGBW / SL BAND 300 TW LED Luminaire Voltage (VAC) vs. Current*

Voltage (AC)	Total Current (A)
100	0.65
110	0.59
120	0.54
130	0.50
140	0.46
150	0.43
160	0.41
170	0.38

Voltage (AC)	Total Current (A)
180	0.36
190	0.34
200	0.33
210	0.31
220	0.30
230	0.28
240	0.27

Note: For wiring of AC input connector, refer to"Connecting SL BAND 300 RGBW / SL BAND 300 TW LED Luminaires to AC Power" on page 6.

2. Connecting Power

Units can be powered in one of two ways:

- Direct connection to a AC power source using an AC input cable. AC input cable accessories and described in"SL BAND 300 RGBW / SL BAND 300 TW LED Luminaire Power Input Cables (North American Models Only)" on page 3. For wiring of AC input connector, refer to "Connecting SL BAND 300 RGBW / SL BAND 300 TW LED Luminaires to AC Power" on page 6.
- Connection from the AC output of another SL BAND 300 RGBW / SL BAND 300 TW LED Luminaire. When using this method, it is very important not to connect any other type of equipment device. Contact your Authorized Showline Dealer for purchasing the special interconnection cable.

WARNING! Only connect other SL BAND 300 RGBW / SL BAND 300 TW LED Luminaires to the AC Output (Thru) connector of a SL BAND 300 RGBW / SL BAND 300 TW LED Luminaire with special interconnection cable which provided by Authorized Showline Dealer.

Connecting SL BAND 300 RGBW / SL BAND 300 TW LED Luminaires to AC Power

If the unit is supplied with an AC input cable but you did not order an AC input connector, Table 2 describes how to connect power to your SL BAND 300 RGBW / SL BAND 300 TW LED Luminaire. Field wiring of the SL BAND 300 RGBW / SL BAND 300 TW LED Luminaire is straight forward. A total of 3 wires/conductors need to be brought to the unit. The following wiring scheme is required:

Table 2: SL BAND 300 RGBW / SLBAND 300 TW LED Luminaire AC Input Connections

Wire Color	Purpose
Brown	Main / Line (100 to 240VAC)
Blue	Neutral
Green/Yellow	Ground (Earth)

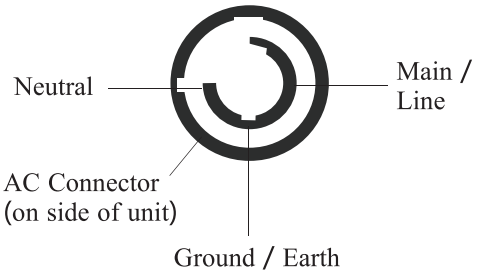

Note: It is recommended that all the wiring works must be conducted by a qualified person.

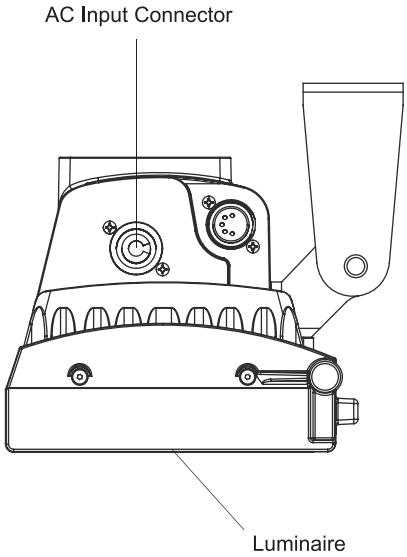

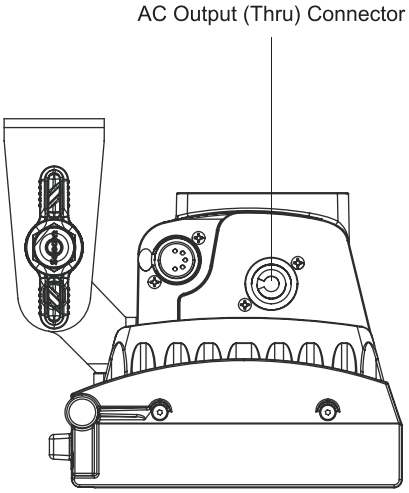

Figure 3: SL BAND 300 RGBW / SL BAND 300 TW LED Luminaire AC Input & Output Connections

CAUTION: In the event the AC input cable of this luminaire is damaged, it must be replaced, with an approved cable through an Authorized Showline Dealer or Service Center.

Showline

3. Connecting to the DMX512 Network

Basic DMX512 installation consists of connecting multiple SL BAND 300 RGBW / SL BAND 300 TW LED Luminaires together (up to 32 luminaires) in "daisy-chain" fashion. A cable runs from the control console (or DMX512 control source) to the DMX connector on the first SL BAND 300 RGBW / SL BAND 300 TW LED Luminaire. Another cable runs from the other DMX connector on the first unit to a DMX connector on the next SL BAND 300 RGBW / SL BAND 300 TW LED Luminaire (or DMX512 device to be controlled).

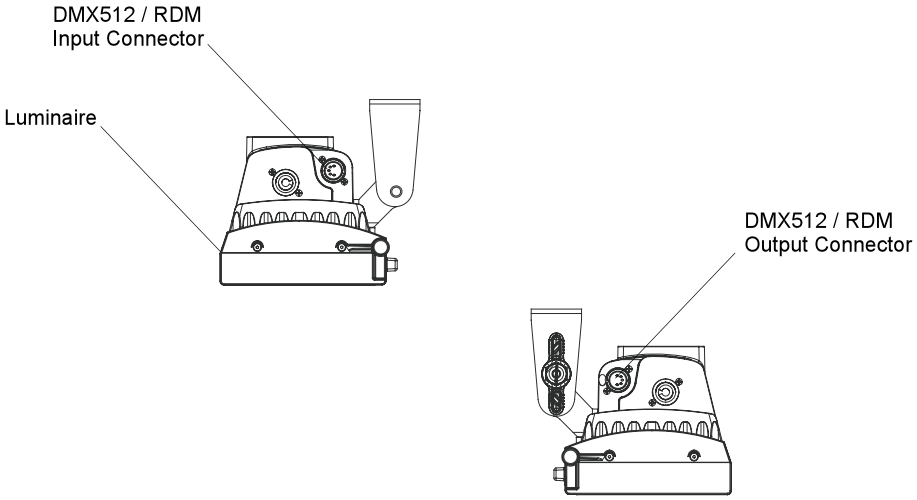

Figure 4: SL BAND 300 RGBW / SL BAND 300 TW LED Luminaire DMX512 Input / Output Connections

Note: For more information on DMX512 networking and systems, refer to "Additional Resources for DMX512" on page 1. For SL BAND 300 RGBW / SL BAND 300 TW LED Luminaire DMX Mapping, refer to "DMX CONTROL" on page 16.

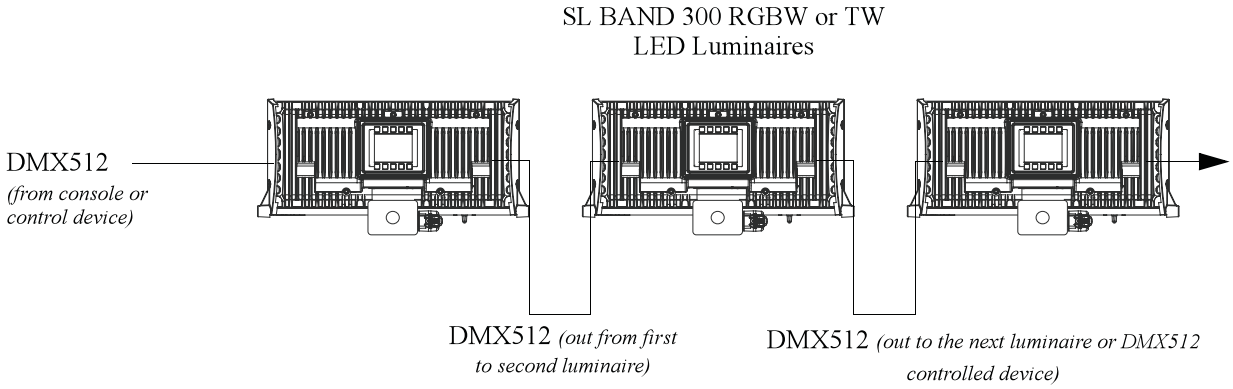

DMX512 Connections

DMX512 Signal	XLR Pin
Common (Drain)	1
DMX512 -	2
DMX512 +	3

Note: Remaining pins on each connector are not used.

Figure 5: SL BAND 300 RGBW / SL BAND 300 TW LED Luminaire - DMX512 Connections

4. Mounting Luminaire

The SL BAND 300 RGBW / SL BAND 300 TW LED Luminaire is provided with a Adjustable Mount Assembly. This assembly easily attaches and detaches from the luminaire via a two bolts. This mount assembly is designed to accept a variety of mounting hooks, clamps, etc. for hanging applications or stud adapters for stand mounting.

Simply attach hook, clamp, stud, etc. to the SL BAND 300 RGBW / SL BAND 300 TW LED Luminaire mount assembly in the M10 hole.

Note: Mounting hooks, clamps, etc. are sold separately or by others. For mounting accessories available for this product, refer to "Accessories" on page 3.

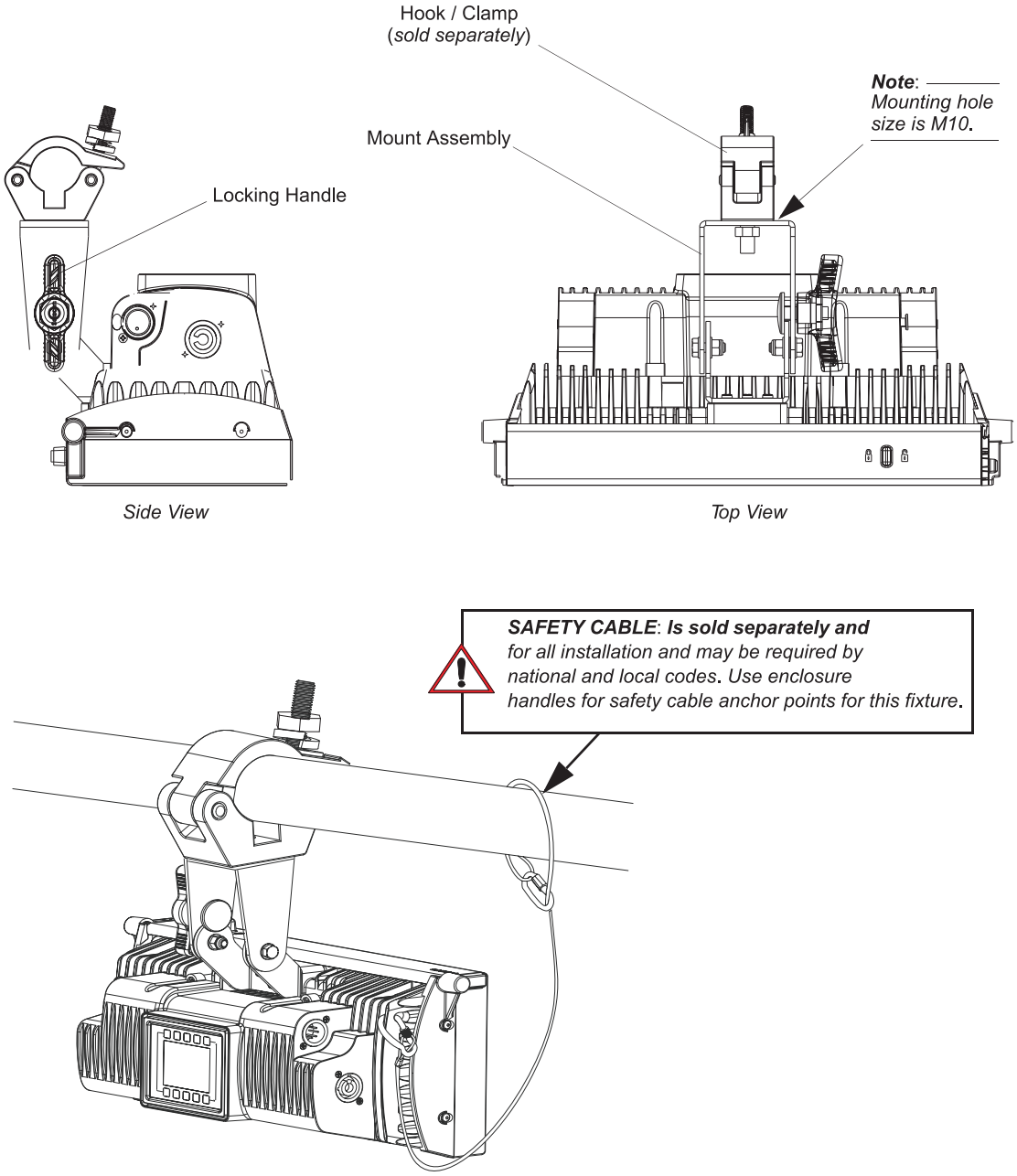

Figure 6: Mount Assembly

OPERATION AND PROGRAMMING

1. LCD Display and Menu System

SL BAND 300 RGBW Luminaires

The SL BAND 300 RGBW Luminaire's LCD Display and Menu System provides local control for accessing the following fixture's settings:

- Presets (Standard and User Defined)
- Color Filters
- Effects (Chases - preloaded and user defined)
- Strobe / Timing
- Fixture Settings
- Fixture Lockout (to prevent changes)
- Password Setting
- Current Fixture Operational Status
- Setting the DMX512 Address

Note: If there are multiple luminaires in a system, changes would need to be made at each LCD Menu as desired. For SL BAND 300 RGBW LED Luminaire menu structure, see "SL BAND 300 RGBW LED Luminaire Menu Tree" on page 11.

SL BAND 300 TW Luminaires

The SL BAND 300 TW Luminaire's LCD Display and Menu System provides local control for accessing the following fixture's settings:

- Presets (Standard and User Defined)
- Strobe / Timing
- Fixture Settings
- Fixture Lockout (to prevent changes)
- Password Setting
- Current Fixture Operational Status
- Setting the DMX512 Address

Note: If there are multiple luminaires in a system, changes would need to be made at each LCD Menu as desired. For SL BAND 300 RGBW LED Luminaire menu structure, see "SL BAND 300 RGBW LED Luminaire Menu Tree" on page 11.

Upon power up, the LCD will display the main screen showing the product type/name. If DMX is enabled, the programmed address will appear after power up.

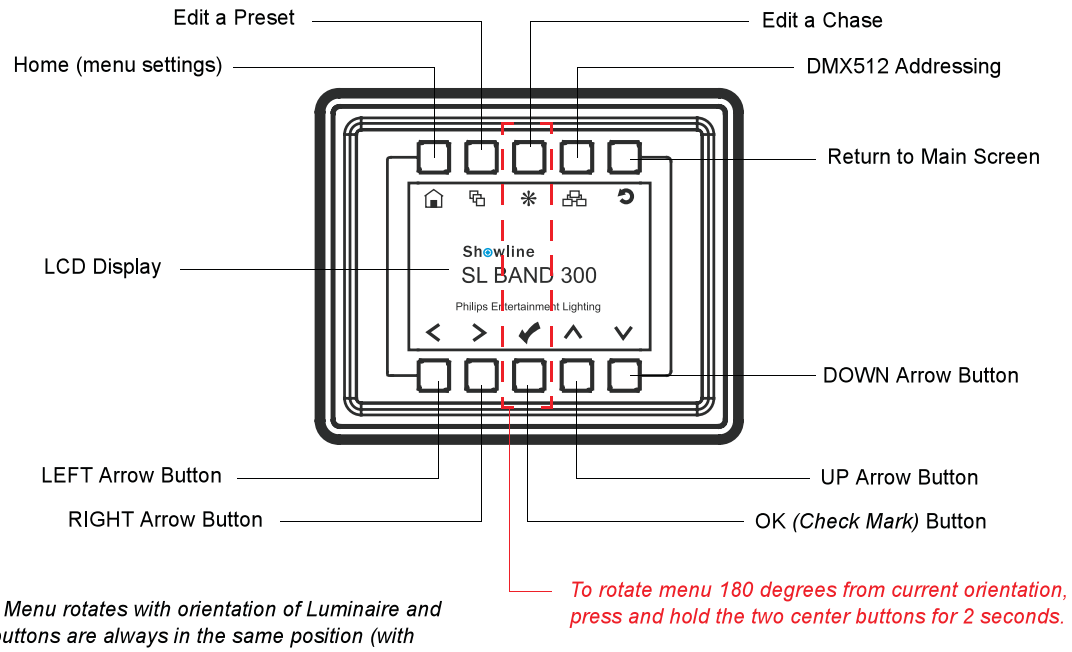

NOTE: *Menu rotates with orientation of Luminaire and menu buttons are always in the same position (with rotation of menu)*

Figure 7: LCD Display and Menu System

2. LCD Display and Menu System Operation

The LCD Display Menu system consists of several categories. Use the Menu Buttons to access and make changes to the menu items. When the desired menu item is reached, press the desired Menu Button to display the menu options and to navigate and configure the menu options as required.

To navigate and access menu settings/selections:

Step 1. Make sure unit is powered and turned on.

Step 2. Press the desired button (as shown in **Figure 7**) to access menu categories.

Step 3. Use UP | DOWN | LEFT | RIGHT arrow buttons to navigate through the various options and settings.

Step 4. Make changes as desired.

Step 5. Press CHECK MARK (OK) button to accept changes.

3. SL BAND 300 RGBW LED Luminaire Menu Tree

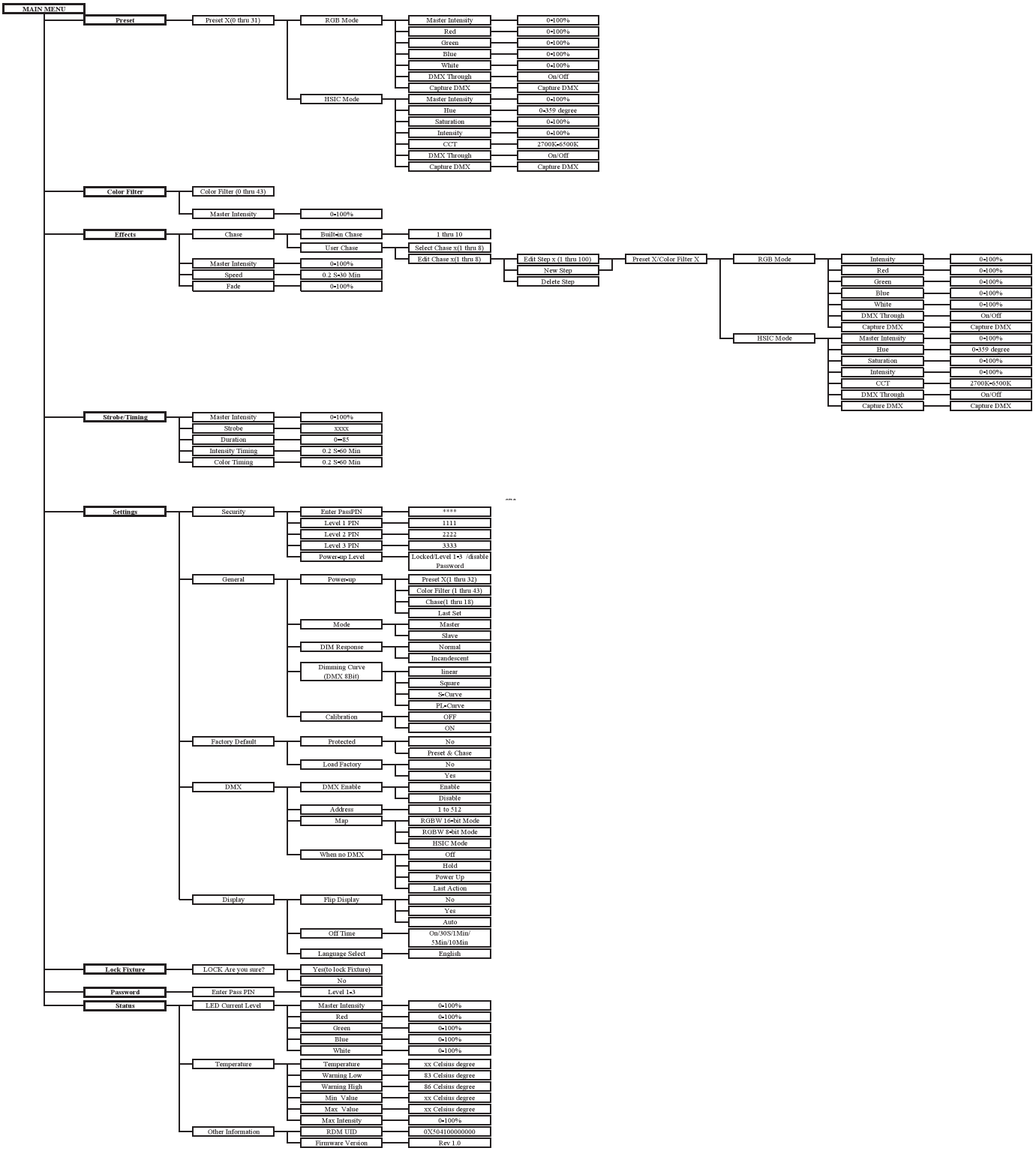

Note: The super password for this unit is 2606.

Figure 8: SL BAND 300 RGBW Luminaire Menu Tree

4. SL BAND 300 TW LED Luminaire Menu Tree

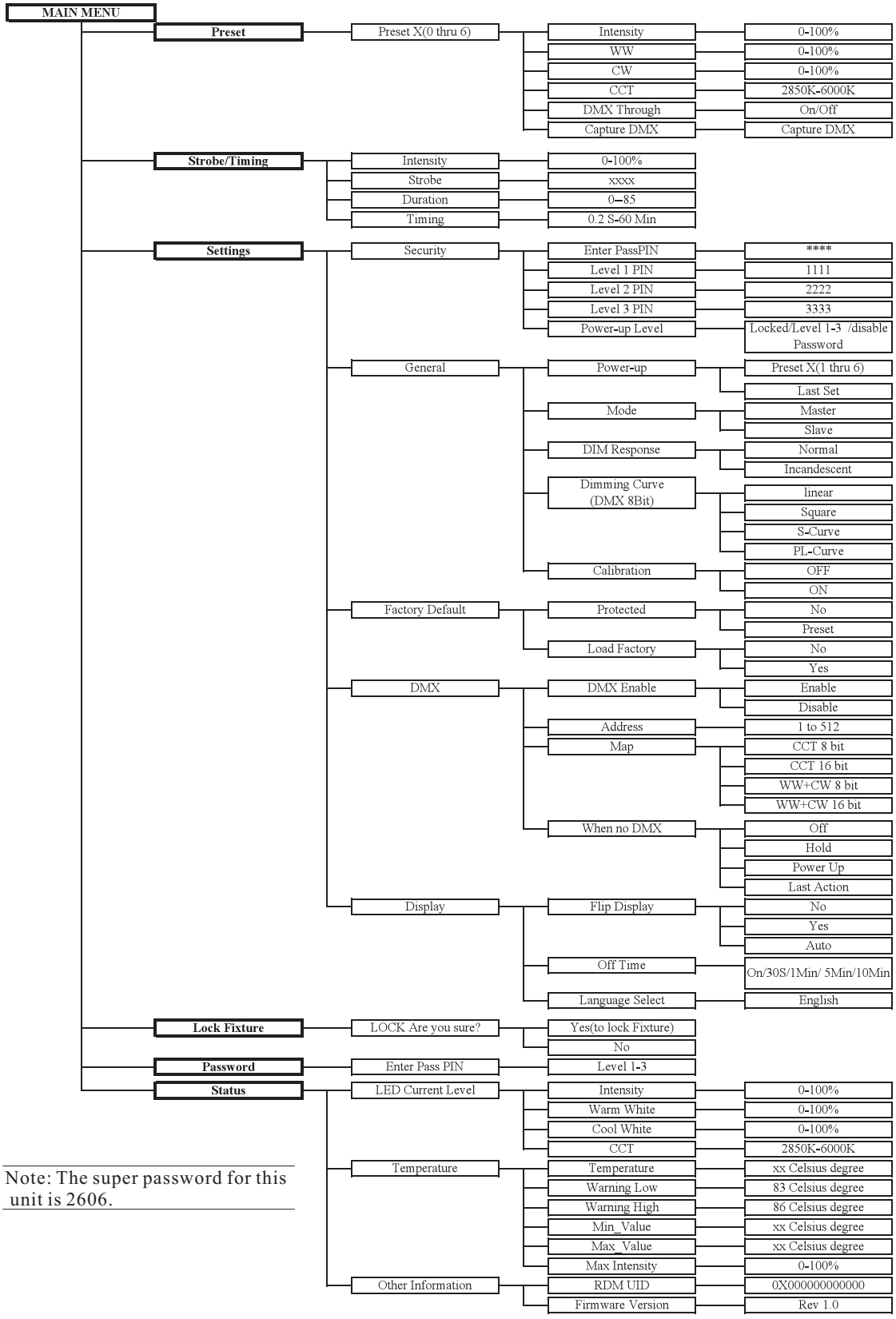

Note: The super password for this unit is 2606.

Figure 9: SL BAND 300 TW Luminaire Menu Tree

5. Quick Selection Buttons

When in Manual Mode, the SL BAND 300 RGBW / SL BAND 300 TW LED Luminaire's features can be accessed via the on-board LCD menu system or via three quick select buttons:

- Edit a Preset Button
- Edit a Chase Button
- DMX Address Button

Edit a Preset Button

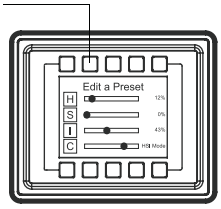

To edit and save a preset:

Step 1. Press Edit a Preset button. Current preset will be shown.

Step 2. Use LEFT and RIGHT arrow buttons to scroll through all presets.

Step 3. Once at desired preset, use UP and DOWN arrows to access (highlight) preset parameters. Once in desired parameter, use LEFT and RIGHT arrow buttons to adjust parameter value as desired.

Step 4. Once all values are adjusted as desired, press OK (Check Mark) button.

Step 5. Save preset menu option will appear. Use LEFT and RIGHT arrow buttons to select preset number.

Step 6. If saving preset, press OK (Check Mark) button. Confirm choice.

Step 7. Preset is now saved.

Edit a Chase Button (RGBW models only)

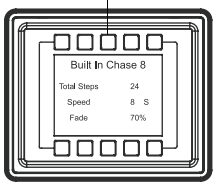

To edit and save a chase:

Step 1. Press Edit a Chase button. Current chase will be shown.

Step 2. Use LEFT and RIGHT arrow buttons to scroll through all chases (Built In and User Chases).

Note: For Built In Chases, only the Speed and Fade parameters may be changed and saved. For User Chases, Chase Number, Total Steps, Speed, and Fade Parameters may be changed and saved.

Step 3. Once at desired chase, use UP and DOWN arrows to access (highlight) chase parameters. Once in desired parameter, use LEFT and RIGHT arrow buttons to adjust parameter value as desired.

Step 4. Once all values are adjusted as desired, press OK (Check Mark) button.

Step 5. Save chase menu option will appear. Use LEFT and RIGHT arrow buttons to select chase number.

Step 6. If saving chase, press OK (Check Mark) button. Confirm choice.

Step 7. Chase is now saved.

DMX Address Button

To edit and save a DMX address:

Step 1. Press DMX Address button. Current DMX Address will be shown.

Step 2. Press OK (Check Mark) button to highlight a digit in the DMX address.

Step 3. Use LEFT and RIGHT arrow buttons to scroll through all digits.

Step 4. Once at desired digit, use UP and DOWN arrows to change highlighted digit. Once digit is set, use LEFT and RIGHT arrow buttons to set other digits in DMX address.

Step 5. Once all digits are set in DMX address, press OK (Check Mark) button.

Step 6. DMX will display and is saved.

6. Dimming Curve Selection

Through the menu, you are able to select one of four dimming curves:

- Linear Curve
- PL_Curve
- S_Curve
- Square Curve

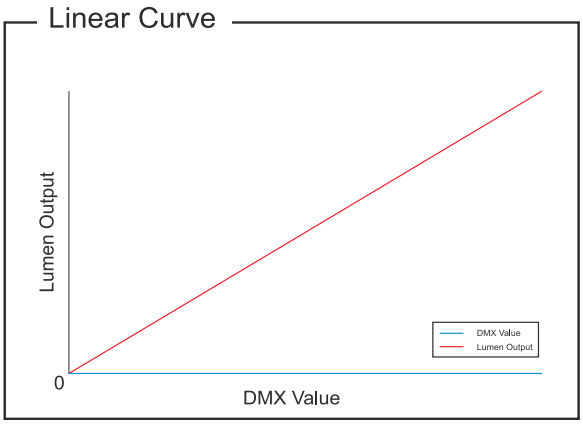

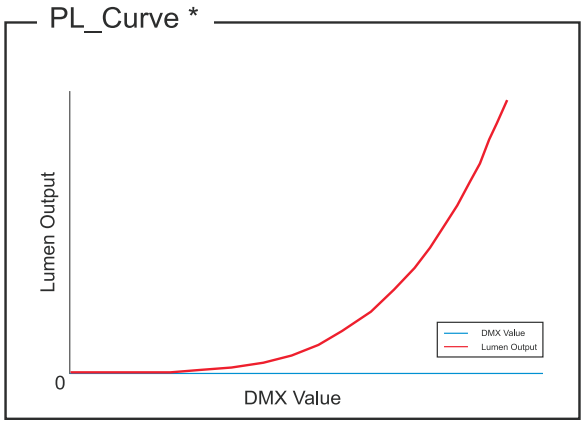

*PL Curve follows the dimming curve of Philips Selecon PL series LED luminaries.

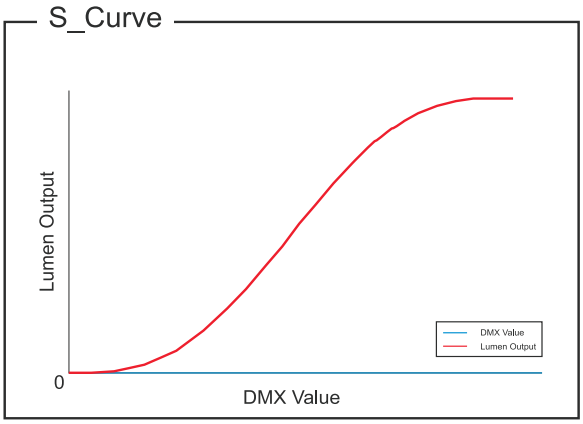

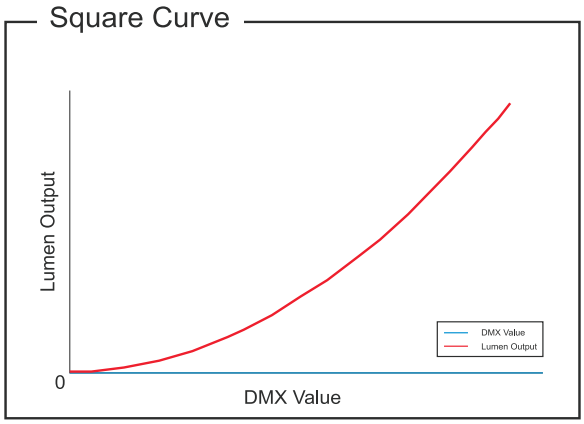

Figure 10: SL BAND 300 RGBW / SL BAND 300 TW LED Luminaire Dimmer Curves

7. Master / Slave Operational Mode

The Master / Slave Operational Mode allows one SL BAND 300 RGBW / SL BAND 300 TW LED Luminaire to act as the "Master" unit and all other connected units are controlled by this unit. When a unit is set to "Slave" mode, it will only listen to and follow any commands sent from a "Master" unit. Only one "Master" unit is allowed in this type of operation.

To setup a master / slave network:

Step 1. Set the first device in the DMX512 chain to Master Mode through the unit's menu system.

Step 2. Set all other connected units to Slave Mode.

Step 3. The master unit can be controlled via DMX512, RDM or through standalone operation (self-contained network utilizing on-board effects). The slave units will mimic the master unit's operation in all cases.

Note: For more information on DMX512 networking and systems, refer to "Additional Resources for DMX512" on page 1. For SL BAND 300 RGBW / SL BAND 300 TW LED Luminaire DMX Mapping, refer to "DMX CONTROL" on page 16.

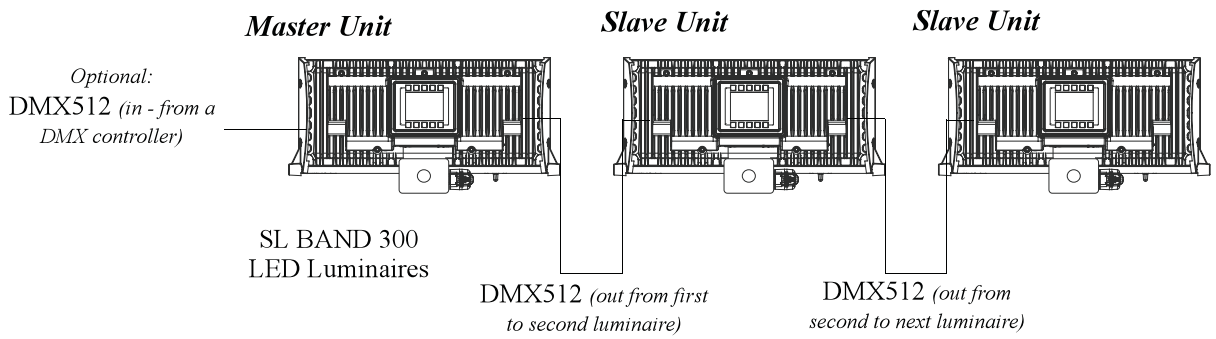

Figure 11: SL BAND 300 RGBW / SL BAND 300 TW LED Luminaire - Master / Slave Configuration

DMX CONTROL

This section contains information for operating the luminaire using DMX control in 16-bit, 8-Bit, or HSIC (Hue, Saturation, Intensity and Color Correction) modes. For Menu options and detailed information, see "LCD Display and Menu System" on page 9.

Note: These tables assume a DMX start address of 1. When a different starting address is used, this address becomes channel 1 function and other functions follow in sequence.

1. SL BAND 300 RGBW LED Luminaire DMX Mapping

16-Bit Mode

Table 3 provides DMX channel mapping of all DMX512 control values when the SL BAND 300 RGBW LED Luminaire is in 16-bit DMX512 mode (as set by the luminaire's menu system).

Table 3: SL BAND 300 RGBW LED Luminaire DMX Channel Mapping (16-Bit Mode)

DMX Channel	Parameter	Range DMX	Range%	Default - *recommended console default values*	Description
1	Master Intensity - High	0 - 65535	0 - 100%	0	16 bit control for Intensity of LED settings.
2	Master Intensity - Low				
3	Color Presets	0 - 255	0 - 100%	0	*Select presets, variable color filters or chases as follows:* Channel OFF (disabled) DMX 0 - 4 Preset 0 (OFF) DMX 5 - 6 Preset 1 DMX 7 - 8 Preset 2 DMX 9 - 10 Preset 3 DMX 11 - 12 Preset 4 DMX 13 - 14 Preset 5 DMX 15 - 16 Preset 6 DMX 17 - 18 Preset 7 DMX 19 - 20 Preset 8 DMX 21 - 22 Preset 9 DMX 23 - 24 Preset 10 DMX 25 - 26 Preset 11 DMX 27 - 28 Preset 12 DMX 29 - 30 Preset 13 DMX 31 - 32 Preset 14 DMX 33 - 34 Preset 15 DMX 35 - 36 Preset 16 DMX 37 - 38 Preset 17 DMX 39 - 40 Preset 18 DMX 41 - 42 Preset 19 DMX 43 - 44 Preset 20 DMX 45 - 46 Preset 21 DMX 47 - 48 Preset 22 DMX 49 - 50 Preset 23 DMX 51 - 52 Preset 24 DMX 53 - 54 Preset 25 DMX 55 - 56 Preset 26 DMX 57 - 58 Preset 27 DMX 59 - 60 Preset 28 DMX 61 - 62

Table 3: SL BAND 300 RGBW LED Luminaire DMX Channel Mapping (16-Bit Mode)

3	Color Presets	0 - 255	0 - 100%	0	*Select presets, variable color filters or chases as follows*: Preset 29 DMX 63 - 64 Preset 30 DMX 65 - 66 Preset 31 DMX 67 - 68 CF_0_Color OFF DMX 69 - 70 CF_1_White 10000K DMX 71 - 72 CF_2_White 8000K DMX 73 - 74 CF_3_White 6500K DMX 75 - 76 CF_4_White 5600K DMX 77 - 78 CF_5_White 5000K DMX 79 - 80 CF_6_White 4500K DMX 81 - 82 CF_7_White 4000K DMX 83 - 84 CF_8_White 3200K DMX 85 - 86 CF_9_White 3000K DMX 87 - 88 CF_10_White 2700K DMX 89 - 90 CF_11_Moroccan Pink DMX 91 - 92 CF_12_Pink DMX 93 - 94 CF_13_Flesh Pink DMX 95 - 96 CF_14_Bright Rose DMX 97 - 98 CF_15_Follies Pink DMX 99 - 100 CF_16_Fuchsia Pink DMX 101 - 102 CF_17_Surprise Pink DMX 103 - 104 CF_18_Congo Blue DMX 105 - 106 CF_19_Blue DMX 107 - 108 CF_20_Virgin Blue DMX 109 - 110 CF_21_Midnight Maya DMX 111 - 112 CF_22_Dluble C.T Blue DMX 113 - 114 CF_23_Slate Blue DMX 115 - 116 CF_24_Regal Blue DMX 117 - 118 CF_25_Fullt C.T Blue DMX 119 - 120 CF_26_Steel Blue DMX 121 - 122 CF_27_Lighter Blue DMX 123 - 124 CF_28_Cyan DMX 125 - 126 CF_29_Marine Blue DMX 127 - 128 CF_30_Soft Green DMX 129 - 130 CF_31_Moss Green DMX 131 - 132 CF_32_Green DMX 133 - 134 CF_33_Fem Green DMX 135 - 136 CF_34_JAS Green DMX 137 - 138 CF_35_Pale Green DMX 139 - 140 CF_36_Spring Yellow DMX 141 - 142 CF_37_Yellow DMX 143 - 144 CF_38_Deep Amber DMX 145 - 146 CF_39_Chrome Orange DMX 147 - 148 CF_40_Orange DMX 149 - 150 CF_41_Magenta DMX 151 - 152 CF_42_Flame Red DMX 153 - 154 CF_43_Purple DMX 155 - 156 Rotate CW Fast → Slow DMX 157 - 171 Rotate ACW Slow → Fast DMX 172 - 186 Random Color Fast → Slow DMX 187 - 201

Table 3: SL BAND 300 RGBW LED Luminaire DMX Channel Mapping (16-Bit Mode)

3	Color Presets	0 - 255	0 - 100%	0	Chase1 DMX 202 - 204 Chase2 DMX 205 - 207 Chase3 DMX 208 - 210 Chase4 DMX 211 - 213 Chase5 DMX 214 - 216 Chase6 DMX 217 - 219 Chase7 DMX 220 - 222 Chase8 DMX 223 - 225 Chase9 DMX 226 - 228 Chase10 DMX 229 - 231 User Chase1 DMX 232 - 234 User Chase2 DMX 235 - 237 User Chase3 DMX 238 - 240 User Chase4 DMX 241 - 243 User Chase5 DMX 244 - 246 User Chase6 DMX 247 - 249 User Chase7 DMX 250 - 252 User Chase8 DMX 253 - 255
4	Strobe	0 - 255	0 - 100%	0	Controls strobe operations as follows . . . **Open = DMX 0 - 2** Closed = DMX 3 - 5 Slow Rand = DMX 6 - 7 Med Rand = DMX 8 - 10 Fast Rand = DMX 11 - 12 Strobe Range = DMX 13 - 127 (fastest) Pulse + Slow Rand= DMX 128 - 129 Pulse + Med Rand = DMX 130 - 131 Pulse + Fast Rand = DMX 132 - 133 Pulse + Range = DMX 134 - 191 Pulse - Slow Rand = DMX 192 - 193 Pulse - Med Rand = DMX 194 - 195 Pulse - Fast Rand = DMX 196 - 197 Pulse - Range = DMX 198 - 255
5	Duration	0 - 255	0 - 100%	0	Strobe's duration,Range is 0-85 0 = DMX 0 1 = DMX 1 - 3 x = (DMX Value-1)/3+1 85 = DMX 253-255
6	Intensity Timing	0 - 255	0 - 100%	255	Allows for timing control of intensity. Channel should default to 255 for smoothest actions using console and/or manual fades.
7	Color Timing	0 - 255	0 - 100%	255	Allows for timing control of colors. Channel should default to 255 for smoothest actions using console and/or manual fades.

Table 3: SL BAND 300 RGBW LED Luminaire DMX Channel Mapping (16-Bit Mode)

8	Control	0 - 255	0 - 100%	0	Functions of the SL Series products. Set control channel value to desired action,Hold value for at least 5 seconds ,then turn to 0. Set control channel value to 0 without any scaling. Default Setting on Console = DMX 0-4 DIM Response _Normal = DMX 5 - 9 DIM Response_Incandescent = DMX 10 - 14 Dimming Curve_linear = DMX 30 - 34 Dimming Curve_Square = DMX 35- 39 Dimming Curve_S-Curve = DMX 40 - 44 Dimming Curve_PL-Curve = DMX 45 - 49 Calibration_OFF = DMX 70 - 74 Calibration_ON = DMX 75 - 79 Reserves(Future use) = DMX 80 - 250
9	Red - High Byte	0 - 65535	0 - 100%	0	16 bit control of Red LEDs from 0 to full.
10	Red - Low Byte				
11	Green - High Byte	0 - 65535	0 - 100%	0	16 bit control of Green LEDs from 0 to full.
12	Green - Low Byte				
13	Blue - High Byte	0 - 65535	0 - 100%	0	16 bit control of Blue LEDS from 0 to full.
14	Blue - Low Byte				
15	White - High Byte	0 - 65535	0 - 100%	0	16 bit control of White LEDs from 0 to full.
16	White - Low Byte				

8-Bit Mode

Table 4 provides DMX channel mapping of all DMX512 control values when the SL BAND 300 RGBW LED Luminaire is in 8-bit DMX512 mode (as set by the luminaire's menu system).

Table 4: SL BAND 300 RGBW LED Luminaire DMX Channel Mapping (8-Bit Mode)

DMX Channel	Parameter	Range DMX	Range%	Default - *recommended console default values*	Description
1	Master Intensity	0 - 255	0 - 100%	0	8 bit control for Intensity of LED settings.
2	Color Presets	0 - 255	0 - 100%	0	*Select presets, variable color filters or chases as follows*: Channel OFF (disabled) DMX 0 - 4 Preset 0 (OFF) DMX 5 - 6 Preset 1 DMX 7 - 8 Preset 2 DMX 9 - 10 Preset 3 DMX 11 - 12 Preset 4 DMX 13 - 14 Preset 5 DMX 15 - 16 Preset 6 DMX 17 - 18 Preset 7 DMX 19 - 20 Preset 8 DMX 21 - 22 Preset 9 DMX 23 - 24 Preset 10 DMX 25 - 26 Preset 11 DMX 27 - 28 Preset 12 DMX 29 - 30 Preset 13 DMX 31 - 32 Preset 14 DMX 33 - 34

Table 4: SL BAND 300 RGBW LED Luminaire DMX Channel Mapping (8-Bit Mode)

2	Color Presets	0 - 255	0 - 100%	0	*Select presets, variable color filters or chases as follows*: Preset 15 DMX 35 - 36 Preset 16 DMX 37 - 38 Preset 17 DMX 39 - 40 Preset 18 DMX 41 - 42 Preset 19 DMX 43 - 44 Preset 20 DMX 45 - 46 Preset 21 DMX 47 - 48 Preset 22 DMX 49 - 50 Preset 23 DMX 51 - 52 Preset 24 DMX 53 - 54 Preset 25 DMX 55 - 56 Preset 26 DMX 57 - 58 Preset 27 DMX 59 - 60 Preset 28 DMX 61 - 62 Preset 29 DMX 63 - 64 Preset 30 DMX 65 - 66 Preset 31 DMX 67 - 68 CF_0_Color OFF DMX 69 - 70 CF_1_White 10000K DMX 71 - 72 CF_2_White 8000K DMX 73 - 74 CF_3_White 6500K DMX 75 - 76 CF_4_White 5600K DMX 77 - 78 CF_5_White 5000K DMX 79 - 80 CF_6_White 4500K DMX 81 - 82 CF_7_White 4000K DMX 83 - 84 CF_8_White 3200K DMX 85 - 86 CF_9_White 3000K DMX 87 - 88 CF_10_White 2700K DMX 89 - 90 CF_11_Moroccan Pink DMX 91 - 92 CF_12_Pink DMX 93 - 94 CF_13_Flesh Pink DMX 95 - 96 CF_14_Bright Rose DMX 97 - 98 CF_15_Follies Pink DMX 99 - 100 CF_16_Fuchsia Pink DMX 101 - 102 CF_17_Surprise Pink DMX 103 - 104 CF_18_Congo Blue DMX 105 - 106 CF_19_Blue DMX 107 - 108 CF_20_Virgin Blue DMX 109 - 110 CF_21_Midnight Maya DMX 111 - 112 CF_22_Dluble C.T Blue DMX 113 - 114 CF_23_Slate Blue DMX 115 - 116 CF_24_Regal Blue DMX 117 - 118 CF_25_Fullt C.T Blue DMX 119 - 120 CF_26_Steel Blue DMX 121 - 122 CF_27_Lighter Blue DMX 123 - 124 CF_28_Cyan DMX 125 - 126 CF_29_Marine Blue DMX 127 - 128 CF_30_Soft Green DMX 129 - 130 CF_31_Moss Green DMX 131 - 132 CF_32_Green DMX 133 - 134 CF_33_Fem Green DMX 135 - 136 CF_34_JAS Green DMX 137 - 138 CF_35_Pale Green DMX 139 - 140

Table 4: SL BAND 300 RGBW LED Luminaire DMX Channel Mapping (8-Bit Mode)

2	Color Presets	0 - 255	0 - 100%	0	*Select presets, variable color filters or chases as follows*: CF_36_Spring Yellow DMX 141 - 142 CF_37_Yellow DMX 143 - 144 CF_38_Deep Amber DMX 145 - 146 CF_39_Chrome Orange DMX 147 - 148 CF_40_Orange DMX 149 - 150 CF_41_Magenta DMX 151 - 152 CF_42_Flame Red DMX 153 - 154 CF_43_Purple DMX 155 - 156 Rotate CW Fast → Slow DMX 157 - 171 Rotate ACW Slow → Fast DMX 172 - 186 Random Color Fast → Slow DMX 187 - 201 Chase1 DMX 202 - 204 Chase2 DMX 205 - 207 Chase3 DMX 208 - 210 Chase4 DMX 211 - 213 Chase5 DMX 214 - 216 Chase6 DMX 217 - 219 Chase7 DMX 220 - 222 Chase8 DMX 223 - 225 Chase9 DMX 226 - 228 Chase10 DMX 229 - 231 User Chase1 DMX 232 - 234 User Chase2 DMX 235 - 237 User Chase3 DMX 238 - 240 User Chase4 DMX 241 - 243 User Chase5 DMX 244 - 246 User Chase6 DMX 247 - 249 User Chase7 DMX 250 - 252 User Chase8 DMX 253 - 255
3	Strobe	0 - 255	0 - 100%	0	Controls strobe operations as follows . . . **Open = DMX 0 - 2** Closed = DMX 3 - 5 Slow Rand = DMX 6 - 7 Med Rand = DMX 8 - 10 Fast Rand = DMX 11 - 12 Strobe Range = DMX 13 - 127 (fastest) Pulse + Slow Rand = DMX 128 - 129 Pulse + Med Rand = DMX 130 - 131 Pulse + Fast Rand = DMX 132 - 133 Pulse + Range = DMX 134 - 191 Pulse - Slow Rand = DMX 192 - 193 Pulse - Med Rand = DMX 194 - 195 Pulse - Fast Rand = DMX 196 - 197 Pulse - Range = DMX 198 - 255
4	Duration	0 - 255	0 - 100%	0	Strobe's duration,Range is 0-85 0 = DMX 0 1 = DMX 1 - 3 x = (DMX Value-1)/3+1 85 = DMX 253-255
5	Timing	0 - 255	0 - 100%	255	Allows for timing control of intensity, color, and zoom parameters. Channel should default to 255 for smoothest actions using console and /or manual fades.

Table 4: SL BAND 300 RGBW LED Luminaire DMX Channel Mapping (8-Bit Mode)

6	Control	0 - 255	0 - 100%	0	Functions of the SL Series products. Set control channel value to desired action,Hold value for at least 5 seconds ,then turn to 0. Set control channel value to 0 without any scaling Default Setting on Console = DMX 0-4 DIM Response _Normal = DMX 5 - 9 DIM Response_Incandescent = DMX 10 - 14 Dimming Curve_linear = DMX 30 - 34 Dimming Curve_Square = DMX 35- 39 Dimming Curve_S-Curve = DMX 40 - 44 Dimming Curve_PL-Curve = DMX 45 - 49 Calibration_OFF = DMX 70 - 74 Calibration_ON = DMX 75 - 79 Reserves(Future use) = DMX 80 - 250
7	Red	0 - 255	0 - 100%	0	8 bit control of Red LEDs from 0 to full.
8	Green	0 - 255	0 - 100%	0	8 bit control of Green LEDs from 0 to full.
9	Blue	0 - 255	0 - 100%	0	8 bit control of Blue LEDs from 0 to full.
10	White	0 - 255	0 - 100%	0	8 bit control of White LEDs from 0 to full.

HSIC Mode

Table 5 provides DMX channel mapping of all DMX512 control values when the SL BAND 300 RGBW LED Luminaire is in HSIC (Hue, Saturation, Intensity, and Color Correction) DMX512 mode (as set by the luminaire's menu system).

Table 5: SL BAND 300 RGBW LED Luminaire DMX Channel Mapping (HSIC Mode)

DMX Channel	Parameter	Range DMX	Range%	Default - *recommended console default values*	Description
1	Master Intensity	0 - 255	0 - 100%	0	8 bit control for Intensity of LED settings.
2	Strobe	0 - 255	0 - 100%	0	Controls strobe operations as follows . . . **Open = DMX 0 - 2** Closed = DMX 3 - 5 Slow Rand = DMX 6 - 7 Med Rand = DMX 8 - 10 Fast Rand = DMX 11 - 12 Strobe Range = DMX 13 - 127 (fastest) Pulse + Slow Rand = DMX 128 - 129 Pulse + Med Rand = DMX 130 - 131 Pulse + Fast Rand = DMX 132 - 133 Pulse + Range = DMX 134 - 191 Pulse - Slow Rand = DMX 192 - 193 Pulse - Med Rand = DMX 194 - 195 Pulse - Fast Rand = DMX 196 - 197 Pulse - Range = DMX 198 - 255
3	Duration	0 - 255	0 - 100%	0	Strobe's duration,Range is 0-85 0 = DMX 0 1 = DMX 1 - 3 x = (DMX Value-1)/3+1 85 = DMX 253-255
4	Timing	0 - 255	0 - 100%	255	Allows for timing control of intensity, color, and zoom parameters. Channel should default smoothest actions using console and to 255 for /or manual fades.

Table 5: SL BAND 300 RGBW LED Luminaire DMX Channel Mapping (HSIC Mode)

5	Control	0 - 255	0 - 100%	0	Functions of the SL Series products. Set control channel value to desired action,Hold value for at least 5 seconds ,then turn to 0. Set control channel value to 0 without any scaling. Default Setting on Console = DMX 0-4 DIM Response _Normal = DMX 5 - 9 DIM Response_Incandescent = DMX 10 - 14 Dimming Curve_linear = DMX 30 - 34 Dimming Curve_Square = DMX 35- 39 Dimming Curve_S-Curve = DMX 40 - 44 Dimming Curve_PL-Curve = DMX 45 - 49 Calibration_OFF = DMX 70 - 74 Calibration_ON = DMX 75 - 79 Reserves(Future use) = DMX 80 - 250
6	Hue - High Byte	0 - 65535	0 - 100%	0	16 bit control of Hue 0 - 359^0
7	Hue - Low Byte				
8	Saturation	0 - 255	0 - 100%	0	8 bit control of Saturation.
9	Intensity	0 - 255	0 - 100%	0	8 bit control of Intensity.
10	CCT	0 - 255	0 - 100%	0	Variable control of correlated color temperature from Channel OFF (disabled) DMX 0 - 5 2700K - 6500K. DMX 6 - 255

2. SL BAND 300 TW LED Luminaire DMX Mapping

SL BAND 300 TW LED Luminaires offer multiple types of DMX mapping as set at the luminaire's menu system. Please make sure you have set your luminaire to and are following the desired DMX mapping for your application.

Table 6: Available DMX Mapping Selections

DMX Maps *(Correlated Color Temperature)*	**DMX Maps** *(Warm White + Cool White)*
CCT 16-Bit	**WW + CW 16-Bit**
CCT 8-Bit	**WW + CW 8-Bit**

16-Bit Mode (CCT)

Table 7 provides DMX channel mapping of all DMX512 control values when the SL BAND 300 TW LED Luminaire is in CCT 16-bit DMX512 mode (as set by the luminaire's menu system).

Table 7: SL BAND 300 TW LED Luminaire DMX Channel Mapping (CCT 16-Bit Mode)

DMX Channel	Parameter	Range DMX	Range%	Default - *recom-mended console default values*	Description
1	Intensity - High	0 - 65535	0 - 100%	0	16 bit control for Intensity of LED settings.
2	Intensity - Low				
3	Strobe(Effect)	0 - 255	0 - 100%	0	Controls strobe operations as follows . . . **Open = DMX 0 - 2** Closed = DMX 3 - 5 Slow Rand = DMX 6 - 7 Med Rand = DMX 8 - 10 Fast Rand = DMX 11 - 12 Strobe Range = DMX 13 - 127 (fastest) Pulse + Slow Rand = DMX 128 - 129 Pulse + Med Rand = DMX 130 - 131 Pulse + Fast Rand = DMX 132 - 133 Pulse + Range = DMX 134 - 191 Pulse - Slow Rand = DMX 192 - 193 Pulse - Med Rand = DMX 194 - 195 Pulse - Fast Rand = DMX 196 - 197 Pulse - Range = DMX 198 - 255

Table 7: SL BAND 300 TW LED Luminaire DMX Channel Mapping (CCT 16-Bit Mode)

4	Duration	0 - 255	0 - 100%	0	Strobe's duration,Range is 0-85 0 = DMX 0 1 = DMX 1 - 3 x = (DMX Value-1)/3+1 85 = DMX 253-255
5	Timing	0 - 255	0 - 100%	255	Allows for timing control of intensity, color parameters. Channel should default to 255 for smoothest actions using console and/or manual fades
6	Control	0 - 255	0 - 100%	0	Functions of the SL Series products. Set control channel value to desired action,Hold value for at least 5 seconds ,then turn to 0. Set control channel value to 0 without any scaling. Default Setting on Console = DMX 0-4 DIM Response _Normal = DMX 5 - 9 DIM Response_Incandescent = DMX 10 - 14 Dimming Curve_linear = DMX 30 - 34 Dimming Curve_Square = DMX 35- 39 Dimming Curve_S-Curve = DMX 40 - 44 Dimming Curve_PL-Curve = DMX 45 - 49 Calibration_OFF = DMX 70 - 74 Calibration_ON = DMX 75 - 79 Reserves Future use = DMX 80 - 250
7	CCT - High	0 - 65535	0 - 100%	0	Variable control of correlated color temperature 2850K-6000K
8	CCT - Low				

16-Bit Mode (WW + CW)

Table 8 provides DMX channel mapping of all DMX512 control values when the SL BAND 300 TW LED Luminaire is in WW + CW 16-bit DMX512 mode (as set by the luminaire's menu system).

Table 8: SL BAND 300 TW LED Luminaire DMX Channel Mapping (WW + CW 16-Bit Mode)

DMX Channel	Parameter	Range DMX	Range%	Default - *recommended console default values*	Description
1	Intensity - High	0 - 65535	0 - 100%	0	16 bit control for Intensity of LED settings.
2	Intensity - Low				
3	Strobe(Effect)	0 - 255	0 - 100%	0	Controls strobe operations as follows . . . **Open = DMX 0 - 2** Closed = DMX 3 - 5 Slow Rand = DMX 6 - 7 Med Rand = DMX 8 - 10 Fast Rand = DMX 11 - 12 Strobe Range = DMX 13 - 127 (fastest) Pulse + Slow Rand = DMX 128 - 129 Pulse + Med Rand = DMX 130 - 131 Pulse + Fast Rand = DMX 132 - 133 Pulse + Range = DMX 134 - 191 Pulse - Slow Rand = DMX 192 - 193 Pulse - Med Rand = DMX 194 - 195 Pulse - Fast Rand = DMX 196 - 197 Pulse - Range = DMX 198 - 255
4	Duration	0 - 255	0 - 100%	0	Strobe's duration,Range is 0-85 0 = DMX 0 1 = DMX 1 - 3 x = (DMX Value-1)/3+1 85 = DMX 253-255
5	Timing	0 - 255	0 - 100%	255	Allows for timing control of intensity, color parameters. Channel should default to 255 for smoothest actions using console and/or manual fades.

Table 8: SL BAND 300 TW LED Luminaire DMX Channel Mapping (WW + CW 16-Bit Mode)

6	Control	0 - 255	0 - 100%	0	Functions of the SL Series products. Set control channel value to desired action,Hold value for at least 5 seconds ,then turn to 0. Set control channel value to 0 without any scaling. Default Setting on Console = DMX 0-4 DIM Response _Normal = DMX 5 - 9 DIM Response_Incandescent = DMX 10 - 14 Dimming Curve_linear = DMX 30 - 34 Dimming Curve_Square = DMX 35- 39 Dimming Curve_S-Curve = DMX 40 - 44 Dimming Curve_PL-Curve = DMX 45 - 49 Calibration_OFF = DMX 70 - 74 Calibration_ON = DMX 75 - 79 Reserves Future use = DMX 80 - 250
7	WW - High Byte	0 - 65535	0 - 100%	0	16 bit control of Warm White LEDs from 0 to full.
8	WW - Low Byte				
9	CW - High Byte	0 - 65535	0 - 100%	0	16 bit control of Cool White LEDs from 0 to full.
10	CW - Low Byte				

8-Bit Mode (CCT)

Table 9 provides DMX channel mapping of all DMX512 control values when the SL BAND 300 TW LED Luminaire is in CCT 8-bit DMX512 mode (as set by the luminaire's menu system).

Table 9: SL BAND 300 TW LED Luminaire DMX Channel Mapping (CCT 8-Bit Mode)

DMX Channel	Parameter	Range DMX	Range%	Default - *recom-mended console*	Description
1	Intensity	0 - 255	0 - 100%	0	8 bit control for Intensity of LED settings.
2	Strobe(Effect)	0 - 255	0 - 100%	0	Controls strobe operations as follows . . . **Open = DMX 0 - 2** Closed = DMX 3 - 5 Slow Rand = DMX 6 - 7 Med Rand = DMX 8 - 10 Fast Rand = DMX 11 - 12 Strobe Range = DMX 13 - 127 (fastest) Pulse + Slow Rand= DMX 128 - 129 Pulse + Med Rand = DMX 130 - 131 Pulse + Fast Rand = DMX 132 - 133 Pulse + Range = DMX 134 - 191 Pulse - Slow Rand = DMX 192 - 193 Pulse - Med Rand = DMX 194 - 195 Pulse - Fast Rand = DMX 196 - 197 Pulse - Range = DMX 198 - 255
3	Duration	0 - 255	0 - 100%	0	Strobe's duration,Range is 0-85 0 = DMX 0 1 = DMX 1 - 3 x = (DMX Value-1)/3+1 85 = DMX 253-255
4	Timing	0 - 255	0 - 100%	255	Allows for timing control of intensity, color, and zoom parameters. Channel should default to 255 for smoothest actions using console and/or manual fades.

Table 9: SL BAND 300 TW LED Luminaire DMX Channel Mapping (CCT 8-Bit Mode)

5	Control	0 - 255	0 - 100%	0	Functions of the SL Series products. Set control channel value to desired action,Hold value for at least 5 seconds ,then turn to 0. Set control channel value to 0 without any scaling. Default Setting on Console = DMX 0-4 DIM Response _Normal = DMX 5 - 9 DIM Response_Incandescent = DMX 10 - 14 Dimming Curve_linear = DMX 30 - 34 Dimming Curve_Square = DMX 35- 39 Dimming Curve_S-Curve = DMX 40 - 44 Dimming Curve_PL-Curve = DMX 45 - 49 Calibration_OFF = DMX 70 - 74 Calibration_ON = DMX 75 - 79 Reserves Future use = DMX 80 - 250
6	CCT	0 - 255	0 - 100%	0	Variable control of correlated color temperature 2850K-6000K

8-Bit Mode (WW + CW)

Table 10 provides DMX channel mapping of all DMX512 control values when the SL BAND 300 TW LED Luminaire is in WW + CW 8-bit DMX512 mode (as set by the luminaire's menu system).

Table 10: SL BAND 300 TW LED Luminaire DMX Channel Mapping (WW + CW 8-Bit Mode)

DMX Channel	Parameter	Range DMX	Range%	Default - *recommended console default values*	Description
1	Intensity	0 - 255	0 - 100%	0	8 bit control for Intensity of LED settings.
2	Strobe(Effect)	0 - 255	0 - 100%	0	Controls strobe operations as follows . . . **Open = DMX 0 - 2** Closed = DMX 3 - 5 Slow Rand = DMX 6 - 7 Med Rand = DMX 8 - 10 Fast Rand = DMX 11 - 12 Strobe Range = DMX 13 - 127 (fastest) Pulse + Slow Rand = DMX 128 - 129 Pulse + Med Rand = DMX 130 - 131 Pulse + Fast Rand = DMX 132 - 133 Pulse + Range = DMX 134 - 191 Pulse - Slow Rand = DMX 192 - 193 Pulse - Med Rand = DMX 194 - 195 Pulse - Fast Rand = DMX 196 - 197 Pulse - Range = DMX 198 - 255
3	Duration	0 - 255	0 - 100%	0	Strobe's duration,Range is 0-85 0 = DMX 0 1 = DMX 1 - 3 x = (DMX Value-1)/3+1 85 = DMX 253-255
4	Timing	0 - 255	0 - 100%	255	Allows for timing control of intensity, color parameters. Channel should default to 255 for smoothest actions using console and/or manual fades.

Table 10: SL BAND 300 TW LED Luminaire DMX Channel Mapping (WW + CW 8-Bit Mode)

5	Control	0 - 255	0 - 100%	0	Functions of the SL Series products. Set control channel value to desired action,Hold value for at least 5 seconds ,then turn to 0. Set control channel value to 0 without any scaling. Default Setting on Console = DMX 0-4 DIM Response _Normal = DMX 5 - 9 DIM Response_Incandescent = DMX 10 - 14 Dimming Curve_linear = DMX 30 - 34 Dimming Curve_Square = DMX 35- 39 Dimming Curve_S-Curve = DMX 40 - 44 Dimming Curve_PL-Curve = DMX 45 - 49 Calibration_OFF = DMX 70 - 74 Calibration_ON = DMX 75 - 79 Reserves Future use = DMX 80 - 250
6	Warm White	0 - 255	0 - 100%	0	8 bit control of Warm White LEDs from 0 to full.
7	Cool White	0 - 255	0 - 100%	0	8 bit control of Cool White LEDs from 0 to full.

3. DMX Timing Channel Detail

Timing channel control improves the timed moves of certain groups of parameters. The SL BAND 300 RGBW / SL BAND 300 TW LED Luminaire provides timing channels in 16-bit mode (one for intensity time and one for color time) and one timing channel in 8-bit (color and intensity timing combined). The luminaire uses its timing channel value to calculate a smooth continuous operation for a given time and transition.

Guidelines:

- Timing channels support time values from zero to 60 minutes.
- To use a timing channel instead of console timing, it is recommended to set the timing channel to the desired value and set cue and/or console cue fade time to zero. A combination of time controls can produce unexpected results.
- The default value setting in the profile should be 255 (proportional control) to allow smooth operation when using console timing.
- The timing channel data should change as a snap. A zero value will give the fastest operation, however, without any smoothing this can appear "steppy" in console timed moves.

Refer to "DMX Timing Channel Detail" for more information.

Table 11: SL BAND 300 RGBW / SL BAND 300 TW LED Luminaire Timing Channel Detail

% Value	DMX	= Seconds *(unless noted)*
0	0	0 (Full Speed)
	1	0.2
	2	0.4
1	3	0.6
	4	0.8
2	5	1
	6	1.2
	7	1.4
3	8	1.6
	9	1.8
4	10	2
	11	2.2
	12	2.4
5	13	2.6
	14	2.8
6	15	3
	16	3.2

Table 11: SL BAND 300 RGBW / SL BAND 300 TW LED Luminaire Timing Channel Detail

% Value	DMX	= Seconds *(unless noted)*
	17	3.4
7	18	3.6
	19	3.8
8	20	4
	21	4.2
	22	4.4
9	23	4.6
	24	4.8
10	25	5
	26	5.2
	27	5.4
11	28	5.6
	29	5.8
	30	6
12	31	6.2
	32	6.4
13	33	6.6
	34	6.8
	35	7.0
14	36	7.2
	37	7.4
15	38	7.6
	39	7.8
	40	8
16	41	8.2
	42	8.4
17	43	8.6
	44	8.8
	45	9
18	46	9.2
	47	9.4
19	48	9.6
	49	9.8
	50	10
20	51	10.2
	52	10.4
	53	10.6
21	54	10.8
	55	11
22	56	11.2
	57	11.4
	58	11.6
23	59	11.8
	60	12
24	61	12.2
	62	12.4
	63	12.6
25	64	12.8
	65	13
26	66	13.2
	67	13.4

Table 11: SL BAND 300 RGBW / SL BAND 300 TW LED Luminaire Timing Channel Detail

% Value	DMX	= Seconds *(unless noted)*
	68	13.6
27	69	13.8
	70	14
28	71	14.2
	72	14.4
	73	14.6
29	74	14.8
	75	15
30	76	15.2
	77	15.4
	78	15.6
31	79	15.8
	80	16
	81	16.2
32	82	16.4
	83	16.6
33	84	16.8
	85	17
	86	17.2
34	87	17.4
	88	17.6
35	89	17.8
	90	18
	91	18.2
36	92	18.4
	93	18.6
37	94	18.8
	95	19
	96	19.2
38	97	19.4
	98	19.6
39	99	19.8
	100	20
	101	21
40	102	22
	103	23
	104	24
41	105	25
	106	26
42	107	27
	108	28
	109	29
43	110	30
	111	31
44	112	32
	113	33
	114	34
45	115	35
	116	36
46	117	37
	118	38

Table 11: SL BAND 300 RGBW / SL BAND 300 TW LED Luminaire Timing Channel Detail

% Value	DMX	= Seconds *(unless noted)*
	119	39
47	120	40
	121	41
48	122	42
	123	43
	124	44
49	125	45
	126	46
	127	47
50	128	48
	129	49
51	130	50
	131	51
	132	52
52	133	53
	134	54
53	135	55
	136	56
	137	57
54	138	58
	139	59
55	140	60
	141	61
	142	62
56	143	63
	144	64
57	145	65
	146	66
	147	67
58	148	68
	149	69
59	150	70
	151	71
	152	72
60	153	73
	154	74
	155	75
61	156	76
	157	77
62	158	78
	159	79
	160	80
63	161	81
	162	82
64	163	83
	164	84
	165	85
65	166	86
	167	87
66	168	88
	169	89

Table 11: SL BAND 300 RGBW / SL BAND 300 TW LED Luminaire Timing Channel Detail

% Value	DMX	= Seconds *(unless noted)*
	170	90
67	171	91
	172	92
68	173	93
	174	94
	175	95
69	176	96
	177	97
	178	98
70	179	99
	180	100
71	181	101
	182	102
	183	103
72	184	104
	185	105
73	186	106
	187	107
	188	108
74	189	109
	190	110
75	191	111
	192	112
	193	113
76	194	114
	195	115
77	196	116
	197	117
	198	118
78	199	119
	200	100
79	201	121
	202	122
	203	123
80	204	124
	205	125
81	206	126
	207	127
	208	128
82	209	129
	210	130
	211	131
83	212	132
	213	133
84	214	134
	215	135
	216	136
85	217	137
	218	138
86	219	139
	220	140

Table 11: SL BAND 300 RGBW / SL BAND 300 TW LED Luminaire Timing Channel Detail

% Value	DMX	= Seconds *(unless noted)*
	221	141
87	222	142
	223	143
88	224	144
	225	145
	226	146
89	227	147
	228	148
	229	149
90	230	150
	231	151
91	232	152
	233	153
	234	154
92	235	155
	236	156
93	237	157
	238	158
	239	159
94	240	160
	241	161
95	242	162
	243	163
	244	164
96	245	165
	246	5 Minutes
97	247	15 Minutes
	248	30 Minutes
	249	60 Minutes
98	250*	60mS
	251*	80mS
99	252*	100mS
	253*	120mS
	254*	140mS
100	255* (default)	160mS

Note: * DMX values 250 to 255 provide smoothing when using console fade timing. DMX value 255 (recommended default) will provide the smoothest timing.

RDM PARAMETER IDS

1. SL BAND 300 RGBW LED Luminaire RDM Parameter IDs

The following tables outline and describe all the RDM parameters IDs associated with SL BAND 300 RGBW LED Luminaires.

- Table 12, "SL BAND 300 RGBW LED Luminaire RDM Product Parameters IDs"
- Table 13, "SL BAND 300 RGBW LED Luminaire RDM UID"
- Table 14, "SL BAND 300 RGBW LED Luminaire RDM Parameters IDs"
- Table 15, "SL BAND 300 RGBW LED Luminaire RDM Manufacturer Status IDs," on page 35
- Table 16, "SL BAND 300 RGBW LED Luminaire RDM Manufacturer Specific PIDs," on page 35

Table 12: SL BAND 300 RGBW LED Luminaire RDM Product Parameters IDs

Model ID	Manufacturer	Model Description	Product Category
0x1101	Philips Entertain. Lighting Asia	SL BAND 300 (RGBW)	0x0509

Table 13: SL BAND 300 RGBW LED Luminaire RDM UID

UID					
MSB of ESTA 50H	LSB of ESTA 41H	1st of Unique Seq.	2nd of Unique Seq.	3rd of Unique Seq.	4th of Unique Seq.

Table 14: SL BAND 300 RGBW LED Luminaire RDM Parameters IDs

Get Allowed	Set Allowed	RDM Parameter IDs	Value	Comment	Implemented
		Category - Network Management			
		DISC_UNIQUE_BRANCH	0x0001		■
		DISC_MUTE	0x0002		■
		DISC_UN_MUTE	0x0003		■
■		PROXIED_DEVICES	0x0010		
■		PROXIED_DEVICES_COUNT	0x0011		
■	■	COMMS_STATUS	0x0015		
		Category - Status Collection			
■		QUEUED_MESSAGE	0x0020		■
■		STATUS_MESSAGES	0x0030		■
■		STATUS_ID_DESCRIPTION	0x0031		■
	■	CLEAR_STATUS_ID	0x0032		■
■	■	SUB_DEVICE_STATUS_REPORT_THRESHOLD	0x0033		
		Category - RDM Information			
■		SUPPORTED_PARAMETERS	0x0050	*Support required only if supporting Parameters beyond the minimum required set.*	■
■		PARAMETER_DESCRIPTION	0x0051	*Support required for Manufacturer-Specific PIDs exposed in SUPPORTED_ PARAMETERS message.*	■

Table 14: SL BAND 300 RGBW LED Luminaire RDM Parameters IDs

Get Allowed	Set Allowed	RDM Parameter IDs	Value	Comment	Implemented
		Category - Product Information			
■		DEVICE_INFO	0x0060		■
■		PRODUCT_DETAIL_ID_LIST	0x0070		
■		DEVICE_MODEL_DESCRIPTION	0x0080		■
■		MANUFACTURER_LABEL	0x0081		■
■	■	DEVICE_LABEL	0x0082		■
■	■	FACTORY_DEFAULTS	0x0090		■
■		LANGUAGE_CAPABILITIES	0x00A0		
■	■	LANGUAGE	0x00B0		
■		SOFTWARE_VERSION_LABEL	0x00C0		■
■		BOOT_SOFTWARE_VERSION_ID	0x00C1		
■		BOOT_SOFTWARE_VERSION_LABEL	0x00C2		
		Category - DMX512 Setup			
■	■	DMX_PERSONALITY	0x00E0		■
■		DMX_PERSONALITY_DESCRIPTION	0x00E1		■
■	■	DMX_START_ADDRESS	0x00F0	*Required if device uses a DMX Slot*	■
■		SLOT_INFO	0x0120		■
■		SLOT_DESCRIPTION	0x0121		■
■		DEFAULT_SLOT_VALUE	0x0122		
		Category - Sensors 0x02xx			
■		SENSOR_DEFINITION	0x0200		■
■	■	SENSOR_VALUE	0x0201		■
	■	RECORD_SENSORS	0x0202		
		Category - Dimmer Settings 0x03xx - FUTURE USE			
		Category - Power / Lamp Settings 0x04xx			
■	■	DEVICE_HOURS	0x0400		
■	■	LAMP_HOURS	0x0401		
■	■	LAMP_STRIKES	0x0402		
■	■	LAMP_STATE	0x0403		
■	■	LAMP_ON_MODE	0x0404		
■	■	DEVICE_POWER_CYCLES	0x0405		
		Category - Display Settings 0x05xx			
■	■	DISPLAY_INVERT	0x0500		■
■	■	DISPLAY_LEVEL	0x0501		
		Category - Configuration 0x06xx			
■	■	PAN_INVERT	0x0600		
■	■	TILT_INVERT	0x0601		
■	■	PAN_TILT_SWAP	0x0602		
■	■	REAL_TIME_CLOCK	0x0603		
		Category - Control 0x10xx			
■	■	IDENTIFY_DEVICE	0x1000		■
	■	RESET_DEVICE	0x1001		

Table 14: SL BAND 300 RGBW LED Luminaire RDM Parameters IDs

Get Allowed	Set Allowed	RDM Parameter IDs	Value	Comment	Implemented
■	■	POWER_STATE	0x1010		
■	■	PERFORM_SELFTEST	0x1020		
■		SELF_TEST_DESCRIPTION	0x1021		
	■	CAPTURE_PRESET	0x1030		
■	■	PRESET_PLAYBACK	0x1031		

Table 15: SL BAND 300 RGBW LED Luminaire RDM Manufacturer Status IDs

Manufacturer Specific messages are in the range of 0x8000 - 0xFFDF. Each Manufacturer-specific Status ID shall have a unique meaning, which shall be consistent across all products having a given Manufacturer ID. See Table B-2, ANSI E1.20-2010.				
Status ID Message	Value	Data Value 1	Data Value 2	Status ID Description
8100H		00H	00H	ALL OK

Table 16: SL BAND 300 RGBW LED Luminaire RDM Manufacturer Specific PIDs

Get Allowed	Set Allowed	RDM Parameter IDs	Type	Length	Unit	Prefix	Min	Max	Default	Description
Category - Manufacturer Defined PIDs - Range is 0x8000-0xffdf (See ANSI E1.20-2010 Standard, Table A-3)										
■	■	8A00H	U8	1	None	None	0	100	100	DIMMER
■	■	8A04H	U8	1	None	None	0	100	100	Dimmer RED
■	■	8A05H	U8	1	None	None	0	100	100	Dimmer GREEN
■	■	8A06H	U8	1	None	None	0	100	100	Dimmer BLUE
■	■	8A07H	U8	1	None	None	0	100	100	Dimmer WHITE
■	■	8AB2H	U8	1	None	None	1	18	1	Chase
■	■	8AB0H	U8	1	None	None	0	43	0	Color Filter
■	■	8AB1H	U8	1	None	None	0	31	0	Preset
■	■	8A92H	U8	1	None	None	0	255	0	Strobe
■	■	8A94H	U8	1	None	None	0	255	0	Duration
■	■	8AC0H	U8	1	None	None	0	255	255	Intensity Timing
■	■	8AC2H	U8	1	None	None	0	255	255	Color Timing
■	■	8A40H	U8	1	None	None	0	1	0	Link Mode
■	■	8A42H	U8	1	None	None	0	1	0	Incandescent Effect
■	■	8AA1H	U8	1	None	None	0	3	0	Dimming Curve
■	■	8A0CH	U8	1	None	None	0	3	0	DMX Fail Mode
■	■	8AA0H	U8	1	None	None	0	4	0	Backlight Off Time
■	■	8AA2H	U8	1	None	None	0	94	0	Power Up Setup
■	■	8A44H	U8	1	None	None	0	1	0	Calibration ON/OFF Setup
■	■	8A41H	U8	1	None	None	0	1	0	Lock Fixture

2. SL BAND 300 TW LED Luminaire RDM Parameter IDs

The following tables outline and describe all the RDM parameters IDs associated with SL BAND 300 TW LED Luminaires.

- Table 17, "SL BAND 300 TW LED Luminaire RDM Product Parameters IDs"
- Table 18, "SL BAND 300 TW LED Luminaire RDM UID"
- Table 19, "SL BAND 300 TW LED Luminaire RDM Parameters IDs," on page 36
- Table 20, "SL BAND 300 TW LED Luminaire RDM Manufacturer Status IDs," on page 38
- Table 21, "SL BAND 300 TW LED Luminaire RDM Manufacturer Specific PIDs," on page 38

Table 17: SL BAND 300 TW LED Luminaire RDM Product Parameters IDs

Model ID	Manufacturer	Model Description	Product Category
0x1101	Philips Entertain. Lighting Asia	SL BAND 300 (TW)	0x0509

Table 18: SL BAND 300 TW LED Luminaire RDM UID

UID					
MSB of ESTA 50H	LSB of ESTA 41H	1st of Unique Seq.	2nd of Unique Seq.	3rd of Unique Seq.	4th of Unique Seq.

Table 19: SL BAND 300 TW LED Luminaire RDM Parameters IDs

Get Allowed	Set Allowed	RDM Parameter IDs	Value	Comment	Implemented
		Category - Network Management			
		DISC_UNIQUE_BRANCH	0x0001		■
		DISC_MUTE	0x0002		■
		DISC_UN_MUTE	0x0003		■
■		PROXIED_DEVICES	0x0010		
■		PROXIED_DEVICES_COUNT	0x0011		
■	■	COMMS_STATUS	0x0015		
		Category - Status Collection			
■		QUEUED_MESSAGE	0x0020		■
■		STATUS_MESSAGES	0x0030		■
■		STATUS_ID_DESCRIPTION	0x0031		■
	■	CLEAR_STATUS_ID	0x0032		■
■	■	SUB_DEVICE_STATUS_REPORT_THRESHOLD	0x0033		
		Category - RDM Information			
■		SUPPORTED_PARAMETERS	0x0050	*Support required only if supporting Parameters beyond the minimum required set.*	■
■		PARAMETER_DESCRIPTION	0x0051	*Support required for Manufacturer-Specific PIDs exposed in SUPPORTED_ PARAMETERS message.*	■
		Category - Product Information			
■		DEVICE_INFO	0x0060		■
■		PRODUCT_DETAIL_ID_LIST	0x0070		

Table 19: SL BAND 300 TW LED Luminaire RDM Parameters IDs

Get Allowed	Set Allowed	RDM Parameter IDs	Value	Comment	Implemented
■		DEVICE_MODEL_DESCRIPTION	0x0080		■
■		MANUFACTURER_LABEL	0x0081		■
■	■	DEVICE_LABEL	0x0082		■
■	■	FACTORY_DEFAULTS	0x0090		■
■		LANGUAGE_CAPABILITIES	0x00A0		
■	■	LANGUAGE	0x00B0		
■		SOFTWARE_VERSION_LABEL	0x00C0		■
■		BOOT_SOFTWARE_VERSION_ID	0x00C1		
■		BOOT_SOFTWARE_VERSION_LABEL	0x00C2		
Category - DMX512 Setup					
■	■	DMX_PERSONALITY	0x00E0		■
■		DMX_PERSONALITY_DESCRIPTION	0x00E1		■
■	■	DMX_START_ADDRESS	0x00F0	*Required if device uses a DMX Slot*	■
■		SLOT_INFO	0x0120		■
■		SLOT_DESCRIPTION	0x0121		■
■		DEFAULT_SLOT_VALUE	0x0122		
Category - Sensors 0x02xx					
■		SENSOR_DEFINITION	0x0200		■
■	■	SENSOR_VALUE	0x0201		■
	■	RECORD_SENSORS	0x0202		
Category - Dimmer Settings 0x03xx - FUTURE USE					
Category - Power / Lamp Settings 0x04xx					
■	■	DEVICE_HOURS	0x0400		
■	■	LAMP_HOURS	0x0401		
■	■	LAMP_STRIKES	0x0402		
■	■	LAMP_STATE	0x0403		
■	■	LAMP_ON_MODE	0x0404		
■	■	DEVICE_POWER_CYCLES	0x0405		
Category - Display Settings 0x05xx					
■	■	DISPLAY_INVERT	0x0500		■
■	■	DISPLAY_LEVEL	0x0501		
Category - Configuration 0x06xx					
■	■	PAN_INVERT	0x0600		
■	■	TILT_INVERT	0x0601		
■	■	PAN_TILT_SWAP	0x0602		
■	■	REAL_TIME_CLOCK	0x0603		
Category - Control 0x10xx					
■	■	IDENTIFY_DEVICE	0x1000		■
	■	RESET_DEVICE	0x1001		
■	■	POWER_STATE	0x1010		
■	■	PERFORM_SELFTEST	0x1020		
■		SELF_TEST_DESCRIPTION	0x1021		

Table 19: SL BAND 300 TW LED Luminaire RDM Parameters IDs

Get Allowed	Set Allowed	RDM Parameter IDs	Value	Comment	Implemented
	■	CAPTURE_PRESET	0x1030		
■	■	PRESET_PLAYBACK	0x1031		

Table 20: SL BAND 300 TW LED Luminaire RDM Manufacturer Status IDs

Manufacturer Specific messages are in the range of 0x8000 - 0xFFDF. Each Manufacturer-specific Status ID shall have a unique meaning, which shall be consistent across all products having a given Manufacturer ID. See Table B-2, ANSI E1.20-2010.				
Status ID Message	Value	Data Value 1	Data Value 2	Status ID Description
8100H		00H	00H	ALL OK

Table 21: SL BAND 300 TW LED Luminaire RDM Manufacturer Specific PIDs

Get Allowed	Set Allowed	RDM Parameter IDs	Type	Length	Unit	Prefix	Min	Max	Default	Description
Category - Manufacturer Defined PIDs - Range is 0x8000-0xffdf (See ANSI E1.20-2010 Standard, Table A-3)										
■	■	8A00H	U8	1	None	None	0	100	100	DIMMER
■	■	8A03H	U16	2	None	None	2850	6000	4350	CCT
■	■	8A0FH	U8	1	None	None	0	100	100	Dimmer Warm White
■	■	8A10H	U8	1	None	None	0	100	100	Dimmer Cool White
■	■	8AB1H	U8	1	None	None	0	31	0	Preset
■	■	8A92H	U8	1	None	None	0	255	0	Strobe
■	■	8A94H	U8	1	None	None	0	255	0	Duration
■	■	8AC0H	U8	1	None	None	0	255	255	Intensity Timing
■	■	8A40H	U8	1	None	None	0	1	0	Link Mode
■	■	8A42H	U8	1	None	None	0	1	0	Incandescent Effect
■	■	8AA1H	U8	1	None	None	0	3	0	Dimming Curve
■	■	8A0CH	U8	1	None	None	0	3	0	DMX Fail Mode
■	■	8AA0H	U8	1	None	None	0	4	0	Backlight Off Time
■	■	8AA2H	U8	1	None	None	0	94	0	Power Up Setup
■	■	8A44H	U8	1	None	None	0	1	0	Calibration ON/OFF Setup
■	■	8A41H	U8	1	None	None	0	1	0	Lock Fixture

CLEANING AND CARE

WARNING! All cleaning should be performed with power completely removed from the luminaire. Never remove protective covers when luminaire is powered. Wear appropriate protective eye wear and gloves when cleaning the fixture. All service and maintenance, other than described herein, should be performed by a qualified technician or Authorized Service Center.

1. Special Cleaning and Care Instructions

Being a solid-state fixture, and unlike most fixtures, the SL BAND 300 RGBW / SL BAND 300 TW LED Luminaire requires very little routine maintenance by the user. This section covers portions of the luminaire that can be removed for cleaning.

The SL BAND 300 RGBW / SL BAND 300 TW LED Luminaire special care when it comes to cleaning front lens assembly. Additional care needs to be taken with the plastic components because they are much easier to scratch or damage than glass.

The following is a list of cleaning materials required to care for your SL BAND 300 RGBW / SL BAND 300 TW LED Luminaire:

- Lint free lens tissue
- Lint or powder free gloves
- Reagent grade isopropyl alcohol*
- A mild soap solution.

Note: *Reagent grade isopropyl alcohol is good to use on the SL BAND 300 RGBW / SL BAND 300 TW LED Luminaire plastic optics with anti-reflection coatings.

If the lens is still dirty after using isopropyl alcohol, for instance if fingerprints or oil is just redistributed and not cleaned off the optic, then a mild soap and water solution can be used to gently wash the lens. Repeat the cleaning with isopropyl alcohol to eliminate streaks and soap residue.

WARNING! Under no circumstances should ammonia-based cleaners, acetone, or other harsh solvents be used on or near the SL BAND 300 RGBW / SL BAND 300 TW LED Luminaire. These types of cleaners or solvents can permanently damage the optics or housings of the fixture.

If you have any questions regarding the use or care of your SL BAND 300 RGBW / SL BAND 300 TW LED Luminaire, please contact Showline technical support or your local Authorized Dealer.

2. Front Lens Cleaning

To clean the front lens:

Step 1. Turn off luminaire and allow to cool completely.

Step 2. Apply a small amount of reagent grade isopropyl alcohol to lint-free lens tissue.

Step 3. Wipe all debris, dirt, fingerprints, etc. from lens.

Step 4. Using a second lint-free lens tissue, wipe off any alcohol residue.

3. Service and Maintenance

For all other service and maintenance issues, please contact your local Showline office or an Authorized Service Center.

WARNING! Disassembly (other than as described herein), alterations, unauthorized service, etc. will void the product warranty. Contact your local Showline office or an Authorized Service Center for technical support and service.

4. Accessories

Only Showline approved accessories should be used with your SL BAND 300 RGBW / SL BAND 300 TW LED Luminaire. For a list of available accessories from Showline, please see "Accessories" on page 3. For questions regarding accessories, please contact your local Authorized Showline Dealer or Showline office.

TECHNICAL SPECIFICATIONS

1. Operational Specifications

Source:	*SL BAND 300 RGBW LED Luminaire:* RGBW LED Array (x36)
	SL BAND 300 TW LED Luminaire: Cool White and Warm White LED Array (x36)
Beam Angle:	10 Degrees
Light Output:	> 2,000 lumens
Color Temperature:	2700 - 6500K for RGBW version and 2850-6000K for TW version(user adjustable)
Input Voltage (AC):	100V to 240V (+/- 10%, auto-ranging)
Current (AC):	0.50 Amps (100V) / 0.21 Amps (240V)
Frequency:	50/60Hz
Control Protocols:	DMX512 (1990) / DMX512A (RDM) / On-Board Menu
Ambient Temperature:	-20 to 40 Degrees C (-4 to 104 Degrees F)
Humidity:	5%-95% Non condensing
Cooling:	Natural Convection
Weight:	8.8 lbs (4.0 kg) - Luminaire only (no mount, AC input cable or accessories)
Housing:	Die Cast Aluminium with Powder Coating
Compliance:	CE Marked (International models), cETLus Listed
IP Rating:	IP20

Note: Common model specifications shown. For specific model specifications, features, and accessories, refer to the product specification sheet for more details.

2. Luminaire Dimensions

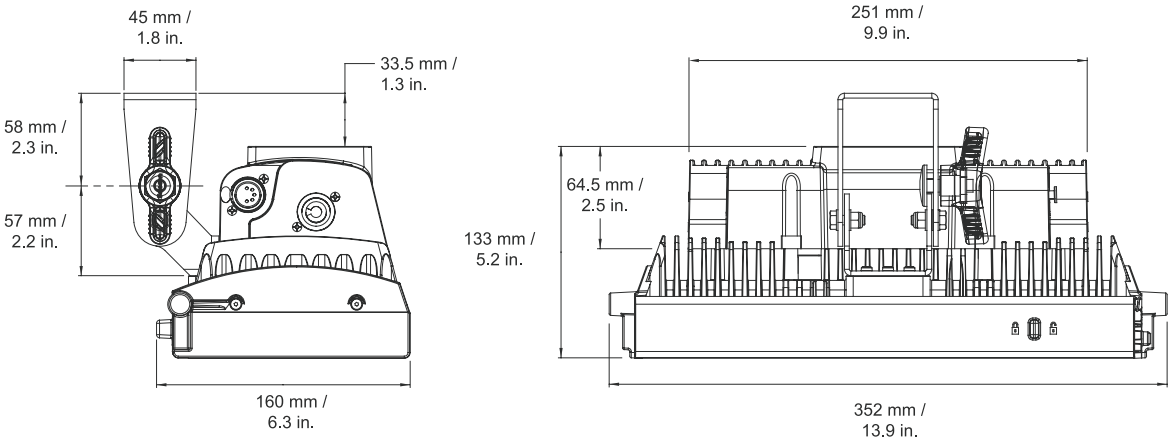

TECHNICAL SUPPORT

GLOBAL 24HR TECHNICAL SUPPORT:

Call: +1 214 647 7880
entertainment.service@signify.com

NORTH AMERICA SUPPORT:

Call: 877-VARI-LITE (877-827-4583)
entertainment.service@signify.com

EUROPEAN CUSTOMER SERVICE CENTER:

Call: +31 (0) 543 542 531
entertainment.europe@signify.com

© 2023 Signify Holding. All rights reserved. All trademarks are owned by Signify Holding or their respective owners. The information provided herein is subject to change, without notice. Signify does not give any representation or warranty as to the accuracy or completeness of the information included herein and shall not be liable for any action in reliance thereon. The information presented in this document is not intended as any commercial offer and does not form part of any quotation or contract, unless otherwise agreed by Signify. Data subject to change.