REVISIONS			
REV	DESCRIPTION	DATE	APP

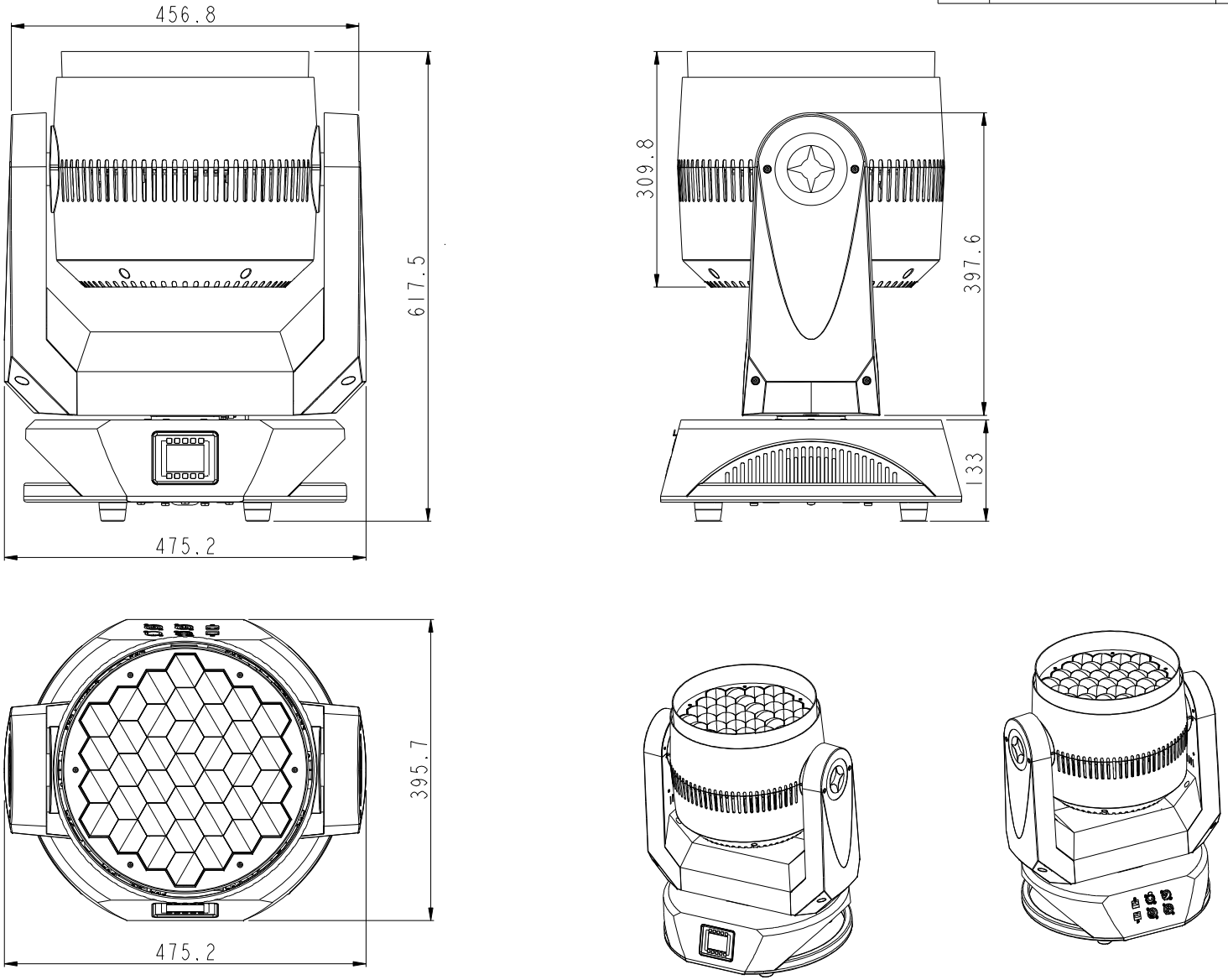

NOTICE
THE INFORMATION CONTAINED IN THIS DRAWING IS THE SOLE PROPERTY OF PHILIPS ENTERTAINMENT ASIA, WITHOUT THE WRITTEN PERMISSION, SHALL NOT BE USED.

Showline
NCW(HOLDINGS)LIMITED
TEL:(852)27969786
FAX:(852)27986545

Title:				Rev	1.0	Scale	1:1	Quantity	
Project:	SL BEAM 500FX			Material				Projection	
Drawing NO:	SL BEAM 500FX-001C			Designed	Checked	Approved		Sheet	Units MM
Tolerance									
<50	50~200	>200	0~360°	Ra	Tony.Gong	?			
±0.15	±0.2	±0.3	±1°						

Signature Not Verified

Digitally signed by jhx
DN: cn=jhx, o=ccw, ou=RD, c=CN
Date: 2016.12.22 04:01:55 Z
Reason: I am approving this document

PHILIPS