PHILIPS

VARI*LITE

Series 550 Wash Luminaires

VL550
VL550D

VL550CD

USER'S MANUAL

All other brand or product names which may be mentioned in this manual are trademarks or registered trademarks of their respective companies or organizations.

The information furnished in this manual is for informational use only and is subject to change without notice. Please check www.vari-lite.com for latest version. Vari-Lite assumes no responsibility or liability for any errors or inaccuracies that may appear in this manual. All information and graphics are property of Vari-Lite, a Philips group company, 10911 Petal Street Dallas, Texas 75238 USA.

Version as of: **17 November 2010**

Part number: **02.9683.0001 0**

Series 550 Wash Luminaire User's Manual

©2010 Philips Vari-Lite, a Philips group company. All Rights Reserved.

How To Obtain Warranty Service

A copy of the Vari-Lite Limited Warranty was included in the shipping package for this VARI✻LITE product.

To obtain warranty service, please contact customer service at 1-877-VARI-LITE (1-877-827-4548), +1-214-647-7880, or entertainment.service@philips.com and request a Return Material Authorization (RMA) for warranty service. You will need to provide the model and serial number of the item being returned, a description of the problem or failure and the name of the registered user or organization. If available, you should have your sales invoice to establish the date of sale as the beginning of the warranty period.

Once you obtain the RMA, pack the unit in a secure shipping container or in its original packing box. Go to the Vari-Lite web site www.vari-lite.com, click on the Support link, and download the RMA form. Put the completed RMA form in shipping container along with a copy of your invoice (if available). Write the RMA number legibly on or near the shipping address label and return the unit, freight prepaid to:

Vari-Lite
Attention: Warranty Service (RMA#_____)
10911 Petal Street
Dallas, Texas 75238 USA

As stated in the warranty, it is required that the shipment be insured and FOB our service center.

Compliance Notice

FCC This equipment has been tested and found to comply with the limits for a Class A digital device pursuant to Part 15 of FCC Rules. These limits are designed to provide reasonable protection against harmful interference when this equipment is operated in a commercial environment. This equipment generates, uses, and can radiate radio frequency energy and, if not installed and used in accordance with Vari-Lite system, service, and safety guidelines, may cause harmful interference to radio communications. Operation of this equipment in a residential area is likely to cause harmful interference, in which case the user will be required to correct the interference at his/her own expense.

CE

Declaration of Conformity

We declare, under our sole responsibility, that this product complies with the relevant clauses of the following standards and harmonized documents:

Safety

EN 60598-1:2000/A11:2000 + A12:2002 Luminaire Safety Standard, General Requirements
EN 60598-2 17:1989/A2:1991 Specification for Luminaires for Stage and Studio Lighting

EMC

EN 61000-6-4:2001 Emission Standard for industrial environments
EN 61000-6-2:2001 Immunity for industrial environments

We certify that the product conforms to the protection requirements of council directives: 73/23/EEC (LVD) and 89/336/EEC (EMC)

Safety Notice

It is extremely important to read ALL safety information and instructions provided in this manual and any accompanying documentation before installing and operating the products described herein. Heed all cautions and warnings during installation and use of this product.

Safety symbols used throughout this manual are as follows:

CAUTION advising of potential damage to product.

WARNING advising of potential injury or death to persons.

GENERAL INFORMATION PERTAINING TO PROTECTION AGAINST ELECTRICAL SHOCK, FIRE, EXPOSURE TO EXCESSIVE UV RADIATION, AND INJURY TO PERSONS CAN BE FOUND BELOW.

WARNING:
INSTRUCTIONS FOR CONTINUED PROTECTION AGAINST FIRE

1. VARI✻LITE luminaires have been designed for use with specific lamp types. The VL550 wash luminaire requires a certain type of lamp (see "Replacement Items/Accessories" on page 8 for all lamp types). Installing another type or unapproved lamp may be hazardous.
2. Luminaires may be mounted on any type of surface as long as mounting instructions are followed. See instructions detailed in this manual.
3. Note distance requirement from combustible materials or illuminated objects for VARI✻LITE luminaires.

WARNING:
INSTRUCTIONS FOR CONTINUED PROTECTION AGAINST ELECTRICAL SHOCK

1. VARI✻LITE luminaires are designed for dry locations only. Exposure to rain or moisture may damage luminaire.
2. Disconnect power before servicing any VARI✻LITE equipment.
3. Servicing to be performed by qualified personnel only.

WARNING:
INSTRUCTIONS FOR CONTINUED PROTECTION AGAINST EXCESSIVE EXPOSURE TO UV RADIATION

1. Many VARI✻LITE luminaires use a lamp that produces UV radiation. DO NOT look directly at lamp.
2. It is hazardous to operate luminaires without lens or shield. Shields, lenses, or ultraviolet screens shall be changed if they have become visibly damaged to such an extent that their effectiveness is impaired. For example, by cracks or deep scratches.

WARNING:
INSTRUCTIONS FOR PROTECTION AGAINST INJURY TO PERSONS

1. Exterior surfaces of the luminaire will be hot during operation. Use appropriate safety equipment (gloves, eye protection, etc.) when handling and adjusting hot equipment and components.
2. Luminaires will have a hot lamp when operating. Disconnect power and allow lamp to cool before replacing.
3. Arc lamps emit ultraviolet radiation which can cause serious skin burn and eye inflammation. Additionally, arc lamps operate under high pressure at very high temperatures. Should the lamp break, there can exist a danger of personal injury and/or fire from broken lamp particles being discharged.
4. Wear eye protection when relamping.
5. Appropriate safety equipment (gloves, eye protection) should be used when handling damaged lamps.
6. If lamp is touched with bare hands, clean lamp with denatured alcohol and wipe with lint-free cloth before installing or powering up the luminaire.
7. The lamp shall be changed if it has become damaged or thermally deformed.

WARNING:
RF INTERFERENCE

1. This is a Class A product. In a domestic environment this product may cause radio interference, in which case, the user may be required to take adequate measures.

Sicherheitshinweise

Es ist äußerst wichtig, ALLE Sicherheitsinformationen und -hinweise in diesem Handbuch und dem beiliegenden Informationsmaterial zu lesen, bevor Sie die hierin beschriebenen Produkte installieren bzw. bedienen. Halten Sie bei der Installation und dem Einsatz dieses Produkts alle Warnhinweise und Vorsichtsmaßnahmen ein.

Folgende Sicherheitssymbole werden in diesem Handbuch verwendet:

VORSICHT - weist auf möglichen Produktschaden hin.

WARNUNG - weist auf mögliche Körperverletzung und Lebensbedrohung hin.

NACHSTEHEND FINDEN SIE ALLGEMEINE HINWEISE ÜBER SICHERHEITSVORKEHRUNGEN GEGEN ELEKTROSCHOCK, FEUER, ÜBERHÖHTE UV-STRAHLUNG UND KÖRPERVERLETZUNGEN.

WARNUNG:
HINWEISE ZUM FEUERSCHUTZ

1. VARI✻LITE-Scheinwerfer sind ausschließlich für den Einsatz mit bestimmten Lampentyps. Achten Sie auf den Lampentyp, bevor Sie die jeweiligen Lampen ersetzen. Die Installation eines anderen Lampentyps kann gefährlich sein.
2. Scheinwerfer können auf jeder beliebigen Oberfläche montiert werden, solange Sie die Montageanweisungen befolgen. Detaillierte Hinweise finden Sie in diesem Handbuch.
3. Beachten Sie die Einhaltung des erforderlichen Sicherheitsabstandes der VARI✻LITE-Scheinwerfer von brennbarem Material oder beleuchteten Objekten.

WARNUNG:
HINWEISE ZUM SCHUTZ GEGEN ELEKTROSCHOCK

1. VARI✻LITE-Scheinwerfer eignen sich ausschließlich für trockene Standorte. Regen oder Feuchtigkeit können die Scheinwerfer beschädigen.
2. Unterbrechen Sie die Stromzufuhr, bevor Sie mit der Arbeit an VARI✻LITE-Geräten beginnen.
3. Die Geräte sollten nur von qualifiziertem Personal gewartet werden.

WARNUNG:
HINWEISE ZUM SCHUTZ GEGEN ÜBERHÖHTE UV-STRAHLUNG

1. Viele VARI✻LITE-Scheinwerfer verwenden die Lampentyp, der UV-Strahlen abgibt. SCHAUEN SIE NICHT direkt in die Lampe.
2. Es ist gefährlich, Leuchten ohne Linsen oder Blenden zu bedienen. Blenden, Linsen oder Ultraviolettschirme müssen ausgetauscht werden, sofern deren Schutzwirkung durch sichtbare Beschädigung (z. B. Sprünge oder Schrammen) eingeschränkt ist.

WARNUNG:
HINWEISE ZUM SCHUTZ GEGEN KÖRPERVERLETZUNGEN

1. Bei Betrieb sind die Außenflächen der Scheinwerfer heiß. Verwenden Sie bei der Bedienung von aufgeheizter Apparatur die jeweils geeignete Sicherheitsausrüstung (Handschuhe, Augenschutz etc.).
2. Bei Betrieb der Scheinwerfer ist die Lampe heiß. Unterbrechen Sie die Stromzufuhr und lassen Sie die Lampe abkühlen, wenn Sie diese austauschen.
3. Bogenlampen senden ultraviolette Strahlen aus, die Hautverbrennungen und Augenentzündungen verursachen können. Der Betrieb von Bogenlampen erfolgt unter Hochdruck und bei hohen Temperaturen. Sollte die Lampe zerbrechen, besteht die Gefahr von Körperverletzung bzw. von Feuer, das von Lampenteilen ausgelöst werden kann.
4. Tragen Sie beim Austausch der Lampen einen Augenschutz.
5. Die geeignete Sicherheitsausrüstung (Handschuhe, Augenschutz) sollte beim Umgang mit beschädigten Lampen verwendet werden.
6. Wenn die Lampe mit bloßen Händen berührt wird, reinigen Sie sie mit denaturiertem Alkohol und einem flusenfreien Tuch, bevor Sie die Scheinwerfer installieren oder in Betrieb nehmen.
7. Wenn die Lampe beschädigt oder durch Hitzeeinwirkung deformiert ist, muß diese ausgetauscht werden.

WARNUNG:
HF-INTERFERENZ

1. Es handelt sich um ein Produkt der Klasse A. In einer Wohnumgebung kann das Produkt Hochfrequenzstörungen verursachen. In diesem Fall müssen eventuell geeignete Maßnahmen getroffen werden.

Notes de sécurité

Avant de procéder à l'installation des produits décrits dans ce guide et de les mettre en marche, il est extrêmement important de lire TOUS les renseignements et TOUTES les directives de sécurité contenues dans ce guide ainsi que toute documentation jointe. Tenir compte de tous les avertissements et suivre toutes les précautions pendant l'installation et l'utilisation de cet appareil.

Les symboles de sécurité utilisés dans ce guide sont les suivants :

ATTENTION Ce symbole annonce que l'appareil risque d'être endommagé.

AVERTISSEMENT Ce symbole annonce qu'il y a risque d'accident grave ou même fatal.

CETTE SECTION CONTIENT DES INFORMATIONS GÉNÉRALES POUR SE PROTÉGER CONTRE LES DÉCHARGES ÉLECTRIQUES , LES INCENDIES, L'EXPOSITION EXCESSIVE AUX RAYONS UV ET TOUT AUTRE ACCIDENT POUVANT ENTRAÎNER DES BLESSURES.

AVERTISSEMENT:
DIRECTIVES POUR SE PROTÉGER CONTRE LES INCENDIES

1. Les luminaires VARI✻LITE ont été conçus pour être utilisés uniquement avec certaines type de lampes. Vérifier le type de lampe avant de remplacer les lampes. L'installation d'un autre type de lampe peut poser un danger.
2. Les luminaires peuvent être fixés sur tout type de surface tant que les directives de montage sont respectées. Voir les explications détaillées dans ce guide.
3. Vérifier la distance à respecter entre les matériaux combustibles ou les objets illuminés et les luminaires VARI✻LITE.

AVERTISSEMENT:
DIRECTIVES POUR SE PROTÉGER CONTRE LES DÉCHARGES ÉLECTRIQUES

1. Les luminaires VARI✻LITE sont conçus pour une utilisation au sec uniquement. Une exposition à la pluie et à l'humidité risque d'endommager le luminaire.
2. Débrancher l'appareil avant de procéder à la révision de tout matériel VARI✻LITE.
3. Les révisions doivent être effectuées uniquement par des personnes qualifiées.

AVERTISSEMENT:
DIRECTIVES POUR SE PROTÉGER CONTRE UNE EXPOSITION EXCESSIVE AUX RAYONS UV

1. Plusieurs luminaires VARI✻LITE utilisent une lampe qui produit des rayons UV. NE PAS fixer son regard sur la lampe.
2. L'utilisation des luminaires sans lentille ou blindage pose des risques. Tous blindages, lentilles ou écrans ultraviolet visiblement endommagés au point que leur efficacité en est affectée doivent être remplacés, par exemple s'il y a des fissures ou de profondes rayures.

AVERTISSEMENT:
DIRECTIVES POUR SE PROTÉGER CONTRE LES ACCIDENTS POUVANT ENTRAÎNER DES BLESSURES

1. Les surfaces externes du luminaire deviennent brûlantes quand l'appareil est en marche. Pour manœuvrer ou ajuster des appareils brûlants et leurs composants, se protéger suffisamment (gants, protection pour les yeux, etc.).
2. La lampe du luminaire est brûlante lorqu'il est en marche. Débrancher le courant et attendre que la lampe ait refroidi avant de la remplacer.
3. Les lampes à arc émettent des rayons ultraviolets pouvant causer de graves brûlures sur la peau et une inflammation des yeux. De plus, les lampes à arc fonctionnent sous haute tension à de très hautes températures. Si la lampe se casse, les particules de la lampe cassée peuvent causer blessures et/ou incendie en s'éparpillant.
4. Se protéger les yeux pour remplacer la lampe.
5. Utiliser des appareils de protection appropriés (gants, protection des yeux) pour manier des lampes endommagées.
6. Si la lampe a été touchée avec des mains nues, la nettoyer avec de l'alcool dénaturé et l'essuyer avec un chiffon non-pelucheux avant d'installer ou de brancher le luminaire.
7. Si la lampe a été endommagée ou a reçu une déformation thermique, elle doit être remplacée.

AVERTISSEMENT:
INTERFÉRENCE RF

1. Cet appareil est de Classe A. Dans un environnement domestique, cet appareil peut causer des interférences radio, et si c'est le cas, l'utilisateur peut avoir à prendre des mesures adéquates.

Aviso sobre Seguridad

Es muy importante leer TODA la información e instrucciones sobre seguridad que se indica en este manual así como en los documentos adjuntos antes de instalar y operar los productos descritos. Se debe prestar atención a todos los avisos y advertencias durante la instalación y uso de este producto.

Los símbolos de seguridad usados en este manual son los siguientes:

CUIDADO, indica posibles daños al producto.

ADVERTENCIA, indica posibles lesiones o muerte a las personas.

LA INFORMACIÓN GENERAL RELACIONADA A LA PROTECCIÓN CONTRAGOLPES DE CORRIENTE ELÉCTRICA, INCENDIO, EXPOSICIÓN EXCESIVA A RADIACIÓN ULTRA VIOLETA Y LESIONES A LAS PERSONAS SE PUEDE ENCONTRAR SEGUIDAMENTE:

ADVERTENCIA:
INSTRUCCIONES PARA PROTECCIÓN CONTINUA CONTRA INCENDIO

1. Las luminarias VARI✻LITE han sido diseñadas para ser usadas solamente con algunas lámparas. Tome nota del tipo de lámpara antes de reemplazarla. Instalación de otro tipo de lámpara puede ser peligroso.
2. Las luminarias se pueden instalar en cualquier tipo de superficie siempre que se sigan las instrucciones de instalación. Vea las instrucciones detalladas en este manual.
3. Tome nota de los requerimientos de distancia de materiales combustibles u objetos iluminados para las luminarias VARI✻LITE.

ADVERTENCIA:
INSTRUCCIONES PARA PROTECCIÓN CONTINUA CONTRA CHOQUE ELÉCTRICO

1. Las luminarias VARI✻LITE están diseñadas solamente para lugares secos. La exposición a la lluvia o humedad pueden dañar la luminaria.
2. Desconecte la energía antes de dar servicio a cualquier equipo de VARI✻LITE.
3. El servicio debe ser realizado solamente por personal calificado.

ADVERTENCIA:
INSTRUCCIONES PARA PROTECCIÓN CONTINUA CONTRA LA EXPOSICIÓN EXCESIVA DE RADIACIÓN ULTRA VIOLETA

1. Muchas luminarias VARI✻LITE usan un tipo de lámpara que produce radiación UV. NO mire directamente a la lámpara.
2. Es peligroso operar luminarias sin lentes o protectores. Debe cambiar los protectores, lentes o pantallas ultravioletas si se aprecia que han sido dañadas, y que su efectividad pudiera estar deteriorada. Por ejemplo, si tuvieran rajaduras o raspaduras profundas.

ADVERTENCIA:
INSTRUCCIONES PARA PROTECCIÓN CONTRA LESIONES DE PERSONAS

1. Las superficies exteriores de las luminarias están calientes durante su operación. Use un equipo de seguridad apropiado (guantes, protección para los ojos, etc.) cuando haga ajustes en el equipo y componentes que están calientes.
2. Cuando las luminarias están en operación la lámpara estará muy caliente. Desconecte la energía y deje que la lámpara se enfríe antes de reemplazarla.
3. Las lámparas de arco emiten radiaciones ultravioletas que pueden ocasionar serias quemaduras a la piel e inflamación a los ojos. Además, las lámparas de arco operan a alta presión y muy alta temperatura. Si la lámpara se rompe, puede existir el peligro de lesiones al personal o un incendio ocasionado por las partículas de la lámpara rota que se caen.
4. Use protección para los ojos cuando vuelve a colocar una lámpara nueva.
5. Use un equipo de seguridad apropiado (guantes, protección para los ojos, etc.) cuando trabaje con lámparas dañadas.
6. Si toca la lámpara con las manos, limpie la lámpara con alcohol desnaturalizado y con tela sin pelusas antes de instalar o volver a conectar la luminaria.
7. Cambie la lámpara si está dañada o deformada termicamente.

ADVERTENCIA:
INTERFERENCIA RF

1. Este es un producto de Clase A. En el ambiente de la casa este producto puede ocasionar radiointerferencia, en cuyo caso, el usuario debe tomar las medidas adecuadas.

安全性に関する注意事項

ここに記載されている製品を取り扱う場合は、まず本マニュアルおよび付属のマニュアルの安全性に関する情報と説明をすべてお読みください。また、実際に本製品を取り付けたり使用する際には、すべての注意事項および警告に留意して作業してください。

本マニュアルでは、以下の安全マークを使用しています。

注意：製品に損傷を与える危険性があります。

警告：人身事故につながる危険性があります。

感電、火災、UV 放射に対する過度の露出、および人身事故を防ぐための一般的な情報については、以下の説明をお読みください。

警告：

火災の発生を防ぐためのヒント

1. VARI✳LITE® 照明器具は、ランプを使用するように設計されています。ランプを交換する際は、ランプの種類（など）を確認するようにしてください。他の種類のランプを取り付けると危険です。
2. 照明器具は、本マニュアルの指示に従って操作するかぎり、どのようなタイプの表面にでも取り付けることができます。詳細については、本マニュアルを参照してください。
3. ヒューズを交換する場合は、同じヒューズ（同じ種類、同じクラス）を使用してください。
4. VARI✳LITE® 照明器具は、可燃性物質または他の光源から必要な距離だけ離して配置してください。

警告：

感電を防ぐためのヒント

1. VARI✳LITE® 照明器具は、乾燥した環境で使用するように設計されています。雨で濡れる場所や湿気の多い場所に取り付けると、照明器具が傷むことがあります。
2. VARI✳LITE® 照明器具を修理点検する場合は、必ず先に電源を切ってください。
3. 照明器具の修理点検は、資格を持つ技師のみが行うようにしてください。

警告：

過度の **UV** 放射にさらされないためのヒント

1. VARI✳LITE® 照明器具の多くは、UV 放射を生ずる HID タイプのランプを使用しています。ランプを直視することは避けてください。
2. レンズまたはシールドを使わずに照明器具を点灯すると危険です。レンズ、シールド、紫外線画面は、ひび割れや深い引っかき傷などにより、その効力が損なわれるようになったら取り替えるようにします。

警告：

人身事故を防ぐためのヒント

1. 照明器具が点灯しているときは、その外側が熱くなります。熱くなった器具やコンポーネントを取り扱う際には、適切な防具（手袋や保護用眼鏡）を使用してください。
2. 照明器具が点灯しているときは、そのランプが熱くなります。ランプを交換する場合は、照明器具の電源を切り、ランプの温度が下がるまで待ってください。ランプの裏ぶたをあけると、遮断スイッチが働いて、ランプの電源が切れる場合があります。
3. アーク灯は紫外線を放射します。この紫外線によって、ひどい火傷を負ったり、目の炎症を起こすことがあります。さらに、アーク灯は、高圧高温の状態で光を発します。そのため、万一アーク灯が破損すると、飛び散った破片で人身事故や火災が発生する危険性があります。
4. 再点灯するときには、保護用眼鏡を着用してください。
5. 損傷したランプを取り扱う場合は、適切な防具（手袋や保護用眼鏡）を着用してください。
6. 手袋を着用せずに直接手でランプを触った場合は、変性アルコールを使ってランプをきれいにし、糸くずの出ない布で拭いてから照明器具を取り付け、電源を入れるようにします。
7. 傷がついたランプや熱によって変形したランプは取り替えてください。

警告：

RF 干渉

1. 本製品は Class A に分類されます。本製品は、家庭環境において無線干渉を起こす可能性があります。その場合、使用者は適切な処置を取らなければならないことがあります。

Table of Contents

Introduction

About This Manual 1
Additional Documentation 2
Text Conventions 2
Customer Service 3

Chapter 1. Description

Features
Overview 6
Components
Included Items 7
Replacement Items/Accessories 8

Chapter 2. Installation

Power and Data Cabling Requirements
Power 10
Current vs. Voltage 11
Data Cables 13
Recommended Cable Types/Manufacturers 14
Termination Connector 15
Installation Procedures
Installing Lamp 16
Hanging the Luminaire 17
Floor Mounting the Luminaire 19
Connecting Data and Power 19
Powering Up
Power-Up Procedure 21
Addressing
Program Starting Address 22
Program Starting Address Without Calibrating Luminaire 22
Transporting
Pack Up Cue 23

Chapter 3. Operation

Color Control
Crossfade Color Mixing 26
DMX Operation
VL550 Wash Channel Mapping 27
DMX Mapping
CYM Crossfade Color Mixing and Dimming 28
Beam Control 28

Luminaire Timing
Luminaire Timing Channel Information 29
Control Channel Functions 36
Updating Software
USB Download and Programming 37
Transferring Software From Luminaire to Luminaire 38

Chapter 4. Menu System

Menu Operation
What Is the Menu System? 42
Default State 43
Shortcuts 43
Menu System Overview 44
Menu System Functions 45
Function Definitions 49
Self Tests
Running Parameter Tests 52
Diagnostic Tests 53
Test Descriptions 53

Appendix A. Maintenance

Equipment Handling
Locations/Use 56
Lamps 56
Servicing 56
Heat 56
Lamp Life 56
Solid State Electronics 57
Electrostatic Discharge (ESD) 57
Printed Circuit Boards (PCBs) 57
Routine Maintenance
Lamp Replacement 58
Front Glass Replacement (VL550 / VL550D Models Only) 59
Zoom Array Assembly Removal and Fixed Lens Mount / Lens Installation (VL550CD Models Only) 61
Cleaning Optical Lenses and Filters 64

Appendix B. Technical Specifications

Mechanical 65
Optical 66
Operational 67
Photometric 68

Introduction

About This Manual

This manual provides necessary information regarding safety, installation, operation and routine maintenance for VARI✻LITE Series 550 Wash Luminaires. Familiarizing yourself with this information will help you to get the most out of your product.

WARNING: It is important to read ALL accompanying safety and installation instructions to avoid damage to the product and potential injury to yourself or others.

This manual covers the following models:

Model	Part Number	Lamp Type	Color Mixing System	Luminaire Body Color	Dimmer
VL550 Wash Luminaire	20.9683.0001	120V or 230V Tungsten	Standard	Black	External - User Supplied
VL550 Wash Luminaire	20.9683.0001.02	120V or 230V Tungsten	Standard	White	External - User Supplied
VL550 Wash Luminaire	20.9683.0011	120V or 230V Tungsten	Pastel	Black	External - User Supplied
VL550 Wash Luminaire	20.9683.0011.02	120V or 230V Tungsten	Pastel	White	External - User Supplied
VL550D Wash Luminaire	20.9683.0002	120V Tungsten	Standard	Black	Integral 120V IGBT Dimmer
VL550D Wash Luminaire	20.9683.0002.02	120V Tungsten	Standard	White	Integral 120V IGBT Dimmer
VL550D Wash Luminaire	20.9683.0012	120V Tungsten	Pastel	Black	Integral 120V IGBT Dimmer
VL550D Wash Luminaire	20.9683.0012.02	120V Tungsten	Pastel	White	Integral 120V IGBT Dimmer
VL550D Wash Luminaire	20.9683.0003	230V Tungsten	Standard	Black	Integral 230V IGBT Dimmer
VL550D Wash Luminaire	20.9683.0003.02	230V Tungsten	Standard	White	Integral 230V IGBT Dimmer
VL550D Wash Luminaire	20.9683.0013	230V Tungsten	Pastel	Black	Integral 230V IGBT Dimmer
VL550D Wash Luminaire	20.9683.0013.02	230V Tungsten	Pastel	White	Integral 230V IGBT Dimmer
VL550CD Wash Luminaire	20.9684.0001	315W Ceramic Discharge	Standard	Black	Internal mechanical douser
VL550CD Wash Luminaire	20.9684.0001.02	315W Ceramic Discharge	Standard	White	Internal mechanical douser
VL550CD Wash Luminaire	20.9684.0011	315W Ceramic Discharge	Pastel	Black	Internal mechanical douser
VL550CD Wash Luminaire	20.9684.0011.02	315W Ceramic Discharge	Pastel	White	Internal mechanical douser

Notes:

- For each model's power requirements, refer to "Current vs. Voltage" on page 11.
- Color Mixing System - "Standard" is standard colors and "Pastel" is softer, Broadway-type color palette.

Additional Documentation

Note: Performing maintenance procedures may void the product warranty. Refer to the Vari-Lite Limited Warranty card included in the product shipping package for more information.

For more information regarding DMX512 systems, refer to the following document available from United States Institute for Theatre Technology, Inc. (USITT):

- Digital Data Transmission Standard for Dimmers & Controllers plus AMX 192 Analog Multiplex Data Transmission Standard for Dimmers & Controllers. (A copy of Recommended Practice for DMX512 is included.)

  USITT Inc.
  6443 Ridings Road
  Syracuse, New York 13206-1111 USA
  Tel: (800) 938-7488 Fax: (866) 398-7488 / www.usitt.org

Text Conventions

The following styles and meanings are used throughout this manual:

Style	Meaning
[Button]	Front panel button. Example: Press [Menu].
[Up] / [Down] arrows	Press either [Up] or [Down] arrow button at Menu Display.
MENU	LCD Menu Display read-out. Example: Press [Up] / [Down] arrows until LAMP appears.

Customer Service

Our Goal

At Vari-Lite, we are committed to providing you the highest quality in customer service. Our comprehensive resources are available to help your business succeed and ensure you get the full benefit of being a Vari-Lite customer. Whether your needs are telephone troubleshooting assistance, product training or technical service, our full-time staff of experienced professionals are on-hand to provide support.

How to Reach Us

For assistance in your area, call the dealer from which your product was purchased. ***or*** Contact an Authorized Service Center ***or*** Contact the Vari-Lite Customer Service Department, 7am - 6pm CST Monday through Friday, at the following:

phone: 1-877-VARI-LITE (1-877-827-4548) or +1-214-647-7880

e-mail: entertainment.service@philips.com

Additional Resources

For additional resources and documentation, please visit our website at www.vari-lite.com and follow the Support link.

Notes

CHAPTER 1.

Description

This chapter contains descriptions of luminaire features and components, along with a list of accessories which are available.

- **Features**
- **Components**

Features

Overview

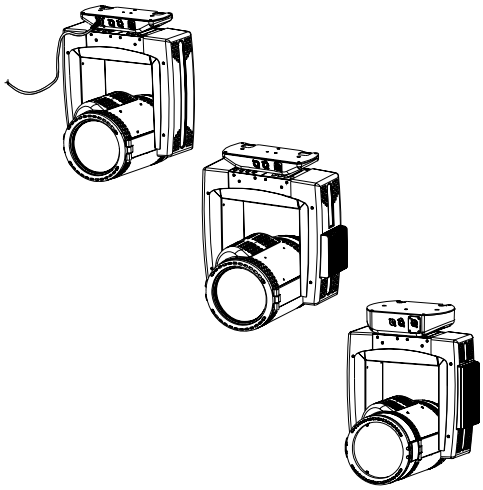

Series 550 Wash Luminaires feature highlights:

- Color Mixing System: The patented DICRO✻TUNE color mixing system using three sets of 16-radially mounted dichroic blades - magenta, blue, and amber - designed to produce smooth, full spectrum color cross-fades. The color system is available in standard and pastel colors.
- Variable Beam Angle:
  - VL550: 6.5° to 24.2° (dependant upon lens type).
  - VL550D: 6.4° to 24.2° (dependant upon lens type).
  - VL550CD: 22° to 80°.
- Beam Control:
  - VL550 and VL550D: A selection of six, easily interchangeable front lenses work with the internal radial diffusing mechanism to provide a variety of beam sizes and shapes. (Stipple lens comes included in the standard models).
  - VL550CD: Patented zoom optical system with continuously variable field angle.
- Source:
  - VL550: 120V/1200W Tungsten Halogen Lamp or 230V/1000W Tungsten Halogen Lamp (Must specify lamp type when ordering).
  - VL550D: 120V Models - 120V/1200W Tungsten Halogen Lamp / 230V Models - 230V/1000W Tungsten Halogen Lamp.
  - VL550CD: 315W CDM (Ceramic Discharge) Lamp.
- Pan/Tilt: Smooth, time-controlled continuous motion by way of a three-phase stepper motor system.
- Range: Pan - 540° , Tilt - 270°.
- Pan/Tilt Accuracy: 0.3° resolution.
- Weights:
  - VL550: 43 lbs (19.5 kg)
  - VL550D: 48 lbs. (21.8 kg)
  - VL550CD: 52 lbs. (23.6 kg)
- Operational Temperature: -20° to +122° F (-29° to +50° C)
- Control by DMX512 protocol.

Components

Included Items

The following illustration shows all items included with the luminaire:

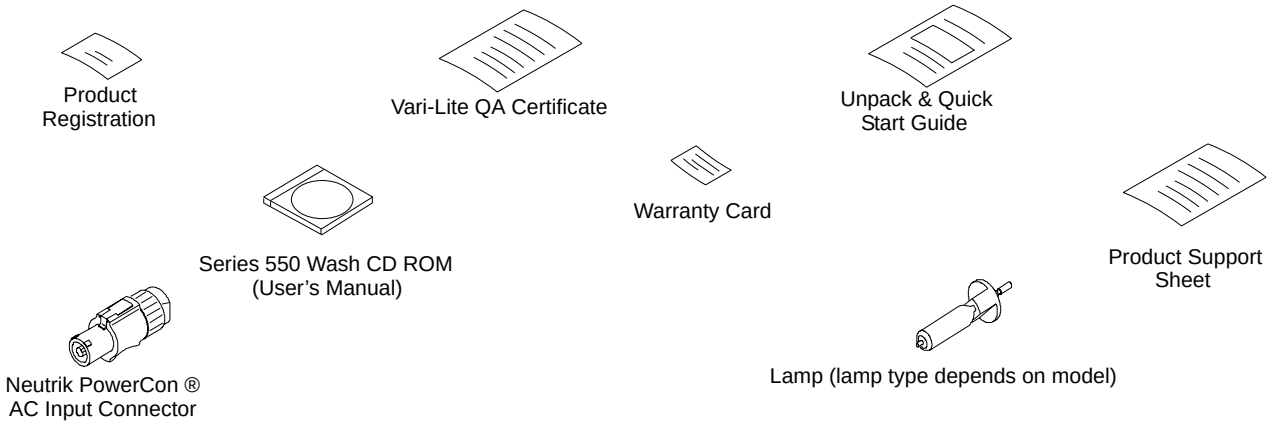

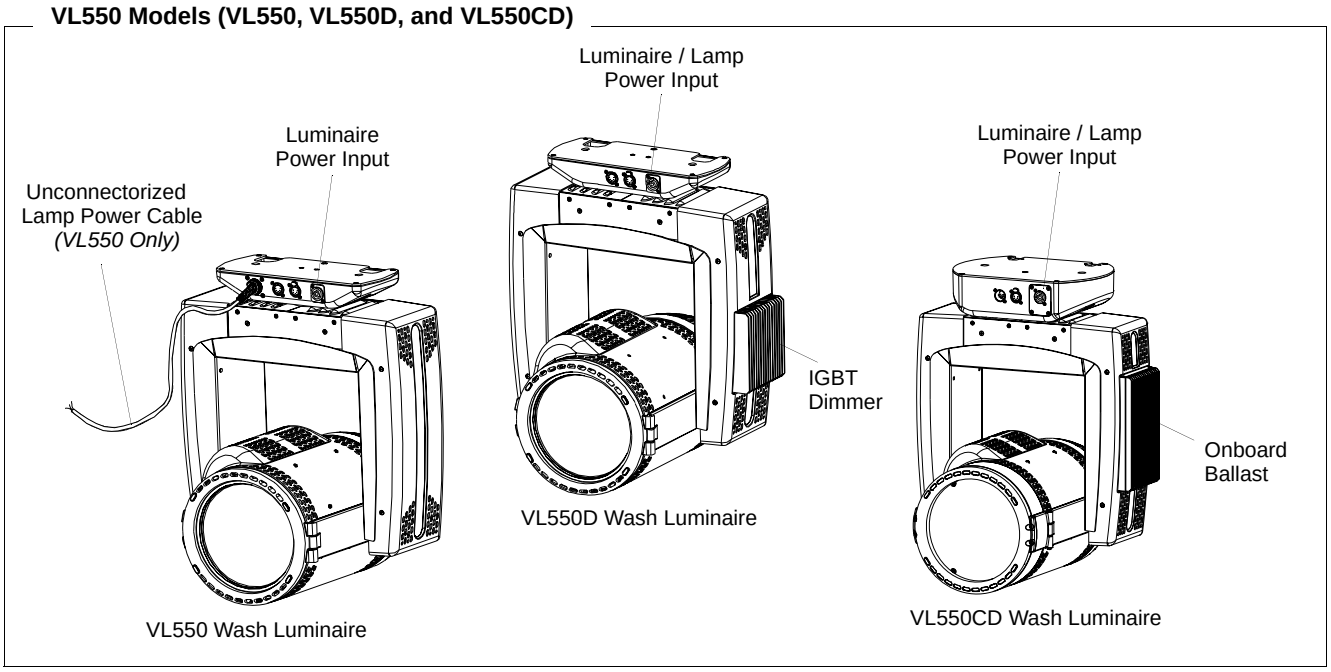

Figure 1-1: VL550 Wash Luminaire Included Items

Replacement Items/Accessories

The following optional and/or replacement items can be ordered directly from your Authorized VARI✻LITE Dealer or Vari-Lite. When ordering, please order by the Vari-Lite part number.

Vari-Lite Part No.	Accessory	Notes
21.9685.0380	VL550CD Fixed Lens Mount Accessory (lens sold separately)	5
22.9620.0194	Safety Cable Assembly	1
25.9661.0057	DMX Termination Connector Assembly	1
28.8550.0054	USB Luminaire Programming Kit	1
42.9685.0201	Clear Lens (VNSP)	2
42.9685.0207	Stipple Lens (NSP) Standard with Fixture	2
42.9685.0203	8-Row Lenticular Lens (MFL)	2
42.9685.0206	10-Row Lenticular Lens (MFL)	2
42.9685.0204	12-Row Lenticular Lens (WFL)	2
42.9685.0205	Buxom Lens (VWFL)	2
55.6840.0001	Mega Clamp Truss Hook, Round and Square	1
55.6841.0001	Mega Claw Truss Hook, 2" Round	1
71.2529.0120	120V/1200W Tungsten Halogen Replacement Lamp	2, 4
71.2526.0230	230V/1000W Tungsten Halogen Replacement Lamp	2, 4
71.2568.0315	315W CDM Replacement Lamp	3, 4

Replacement Items Accessories Notes:

1. For use with any model in this manual.
2. For use with VL550 and VL550D models only. For lens installation or replacement, refer to the procedure in "Front Glass Replacement (VL550 / VL550D Models Only)" on page 59.
3. For use with VL550CD models only.
4. For approved lamp types, see the latest version of Vari-Lite technical notice TN-248 in the product downloads section on the Vari-Lite web site, www.vari-lite.com.
5. For VL550CD luminaires only. See "Zoom Array Assembly Removal and Fixed Lens Mount / Lens Installation (VL550CD Models Only)" on page 61 for application procedure.

CHAPTER 2.

Installation

This chapter contains instructions for installation of the luminaire. It includes connecting power and data, along with instructions for powering up the luminaire for the first time and addressing it within your system.

- **Power and Data Cabling Requirements**
- **Installation Procedures**
- **Powering Up**
- **Addressing**
- **Transporting**

Power and Data Cabling Requirements

Power

The luminaire requires standard AC power distribution from 100-240 VAC, 50/60 Hz. Three amps to twelve amps will be required depending on the AC supply voltage and product model.

Depending on the application, the luminaire's AC input cable may require a different connector. If required, install a new connector meeting your requirements using the following wire color code reference:

Wire*	Connection
Green/Yellow	AC Ground
Blue	AC Neutral
Brown	AC Line

* International (Harmonized) Standard

WARNING: DO NOT connect to three-phase service in countries with 240 volt power.

For single-phase power at 100 to 240 volts RMS:

Connection	Pin
AC Neutral	X
AC Line	Y
Ground (Earth)	G

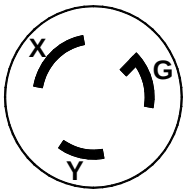

For three-phase power at 208 volts RMS:

Connection	Pin
Phase 1	X
Phase 2	Y
Ground (Earth)	G

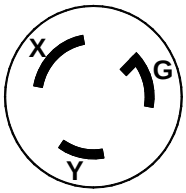

WARNING: It is not recommended to power any VARI✻LITE® luminaire from a dimmer - even in 'NONDIM' mode. Dimmer modules are not suitable sources of power because their output modifies the AC wave form. This may work for a short time, but will eventually result in power problems, luminaire mis-operation and/or failure. Only the lamp on Series 550 Wash Luminaires, WITHOUT an on-board dimmer (only at the lamp input power connector), can be controlled through an external dimmer circuit. The luminaire power must not be connected to a dimmer. Use constant current or relay modules only.

Current vs. Voltage

The following tables provide the luminaire's current draw at specific voltages. Total Luminaire Current is calculated with the lamp on and all motors sequencing.

Table 2-1: VL550 Wash Luminaire - Current vs. Voltage (120V/1200W Lamp)

Voltage @ 60Hz	Total Luminaire Current (Motor + Lamp Current)	Motor Current	Lamp Current
90V	15.9A	2.5A	13.4A
100V	14.3A	2.3A	12.0A
110V	13.0A	2.1A	10.9A
120V	11.9A	1.9A	10.0A
130V	11.1A	1.8A	9.3A

Table 2-2: VL550 Wash Luminaire - Current vs. Voltage (230V/1000W Lamp)

Voltage @ 60Hz	Total Luminaire Current (Motor + Lamp Current)	Motor Current	Lamp Current
180V	6.9A	1.3A	5.6A
190V	6.5A	1.2A	5.3A
200V	6.2A	1.2A	5.0A
210V	5.9A	1.1A	4.8A
220V	5.7A	1.1A	4.6A
230V	5.4A	1.0A	4.4A
240V	5.2A	1.0A	4.2A

WARNING: On VL550 Wash Luminaires (without an on-board dimmer, the lamp can be powered by a dimmer circuit. Do not use dimmer or non-dim modules to supply luminaire operational power.

Table 2-3: VL550D Wash Luminaire - Current vs. Voltage (120V/1200W Lamp)

Voltage @ 60Hz	Total Luminaire Current (Motor + Lamp Current)
90V	15.8A
100V	14.3A
110V	13.0A
120V	11.9A
130V	11.0A

Table 2-4: VL550D Wash Luminaire - Current vs. Voltage (230V Version)

Voltage @ 60Hz	Total Luminaire Current (Motor + Lamp Current)
180V	6.9A
190V	6.5A
200V	6.2A
210V	5.9A
220V	5.7A
230V	5.4A
240V	5.2A

Table 2-5: VL550CD Wash Luminaire - Current vs. Voltage (315W CDM Lamp)

Voltage @ 60Hz	Total Luminaire Current (Motor + Lamp Current)
100V	7.2A
120V	6.0A
140V	5.1A
160V	4.5A
180V	4.0A
200V	3.6A
210V	3.4A
220V	3.3A
230V	3.1A
240V	3.0A

Data Cables

The luminaire is equipped with two, 5-pin XLR connectors for DATA IN and DATA THRU (out) applications. DATA IN requires a 5-pin, female XLR connector and DATA THRU requires a 5-pin, male XLR connector. When purchasing or constructing data cables, it is important that not only the correct cable type be used, but also quality cable to ensure a reliable DMX512 system. Your cabling should meet the following USITT DMX specification requirements:

- Suitable for use with EIA485 (RS485) operation at 250k baud.
- Characteristic impedance 85-150 ohms, nominally 120 ohms.
- Low capacitance.
- Two twisted pairs.
- Foil and braid shielded.
- 24 AWG min. gauge for runs up to 1000 feet (300m).
- 22 AWG min. gauge for runs up to 1640 feet (500m).

Note: Microphone type cables and other general purpose, two-core audio or signal cables are not suitable for use with DMX512.

Refer to the USITT Recommended Practice for DMX512 guide for additional information regarding DMX512 systems. How to obtain a copy is detailed in "Additional Documentation" on page 2.

The XLR 5-pin connectors should be wired as follows:

Pin/Wire Code to XLR Connectors						
Data Thru Cable Pinout 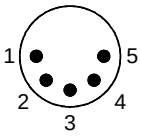 Male Conn.	**Pin 1** Foil & Braided Shield	**Pin 2** 1st conductor of 1st twisted pair Data (-)	**Pin 3** 2nd conductor of 1st twisted pair Data (+)	**Pin 4** 1st conductor of 2nd twisted pair Data (-)	**Pin 5** 2nd conductor of 2nd twisted pair Data (+)	Data In Cable Pinout 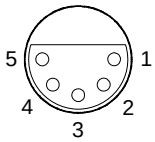 Female Conn.

Recommended Cable Types/Manufacturers

These are only a few of the suitable cable types. Any quality EIA485, twisted pair, 120 ohm, shielded cable will also work.

Type	Pairs	ZΩ*	Jacket	AWG	Use	Temp (F)
Belden Cables						
1215A	2	150	PVC	26	IBM Type 6 Office cable	75
1269A	2	100	PTFE	22 (Solid)	High Temp, Plenum cable	200
8102	2	100	PVC	24	UL2919	80
8132	2	120	PVC	28	UL2919	80
8162	2	100	PVC	24	UL2493	60
82729	2	100	PTFE	24	High Temp, Plenum cable	200
88102	2	100	PTFE	24	High Temp, Plenum cable	200
89696	2	100	PTFE	22	High Temp, Plenum cable	200
89729	2	100	PTFE	24	High Temp, Plenum cable	200
89855	2	100	PTFE	22	High Temp, Plenum cable	200
9729	2	100	PVC	24	UL2493	60
9804	2	100	PVC	28	UL2960	60
9829	2	100	PVC	24	UL2919	80
9842	2	120	PVC	24	UL2919	80
Proplex Cables						
PC224P	2	110	Polyurethane	22	Heavy Duty and Portable	105
PC224T	2	110	PVC	22	UL2464	105
PC226T	3	110	PVC	22	UL2464	

* Characteristic Impedance

Termination Connector

A XLR termination connector is required at the last luminaire (or "far end of the line") to prevent signal reflections. Signal reflections may cancel out the signal at certain line lengths, resulting in errors. The terminator is also necessary for software downloads and running tests on multiple luminaires. To construct your own connector, you will need the following components:

- 5-pin, male XLR connector.
- Two 1/4W 5% 120 ohm resistors.

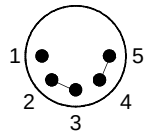

Solder resistors across pins 2 & 3, and 4 & 5

Note: A male termination connector is available as an accessory from Vari-Lite. See "Replacement Items/Accessories" on page 8.

Installation Procedures

Installing Lamp

In the event the lamp was packed separately during shipment, it will be necessary to install in the luminaire before use.

WARNING: Ensure that power is removed from luminaire when installing lamp.

CAUTION: Wear cotton gloves or other covering while installing lamp. Touching lamp glass with bare fingers will leave oil and may cause the lamp to explode or reduce lamp life. If touched, use isopropyl alcohol and cotton cloth to thoroughly clean glass portion of lamp.

To install lamp (if applicable):

Step 1. Ensure power is removed from luminaire.

Step 2. Remove lamp from shipping box.

Step 3. Set the luminaire head horizontally.

Step 4. Engage service tilt lock to secure luminaire head in position.

Step 5. Unlatch and open back of luminaire.

Step 6. Install lamp into lamp socket taking care not to touch lamp glass.

Step 7. Close and re-latch back of luminaire.

Step 8. Disengage service tilt lock to allow luminaire head to move freely.

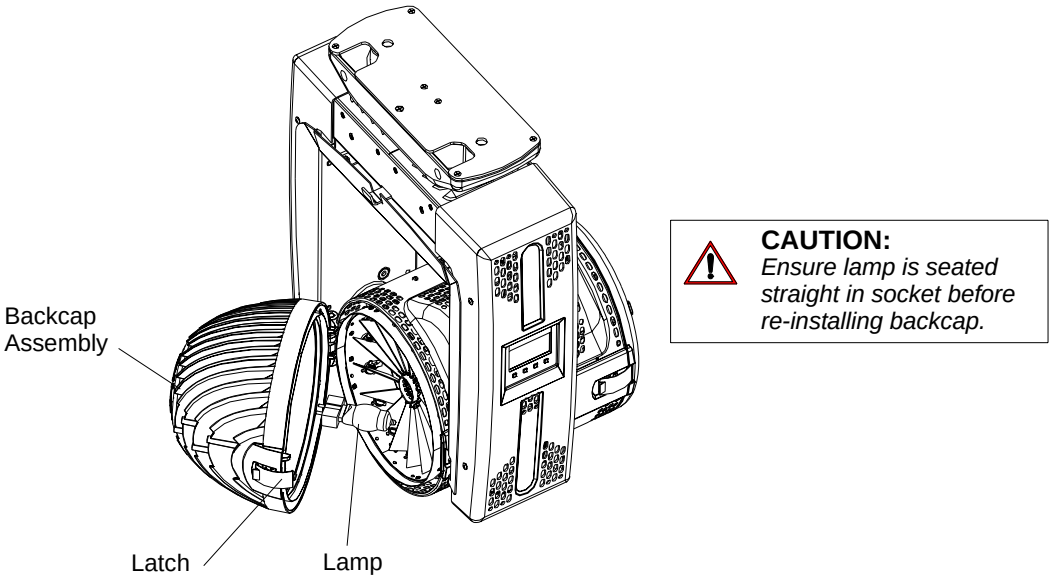

Figure 2-1: Installing Lamp

Hanging the Luminaire

The Series 550 Wash Luminaire can be hung horizontally or vertically from any structure designed to work with the type of load created by this moving luminaire. Two mounting truss hooks or other mounting hardware are required. Many compatible truss hooks are available from different manufacturers for your particular needs.

A minimum of two hooks per luminaire is required. If mounting method does not use truss hooks, two attachment points, per luminaire, are required.

Install mounting hardware:

Step 1. Install truss hooks directly to the luminaire base (foot) as required.

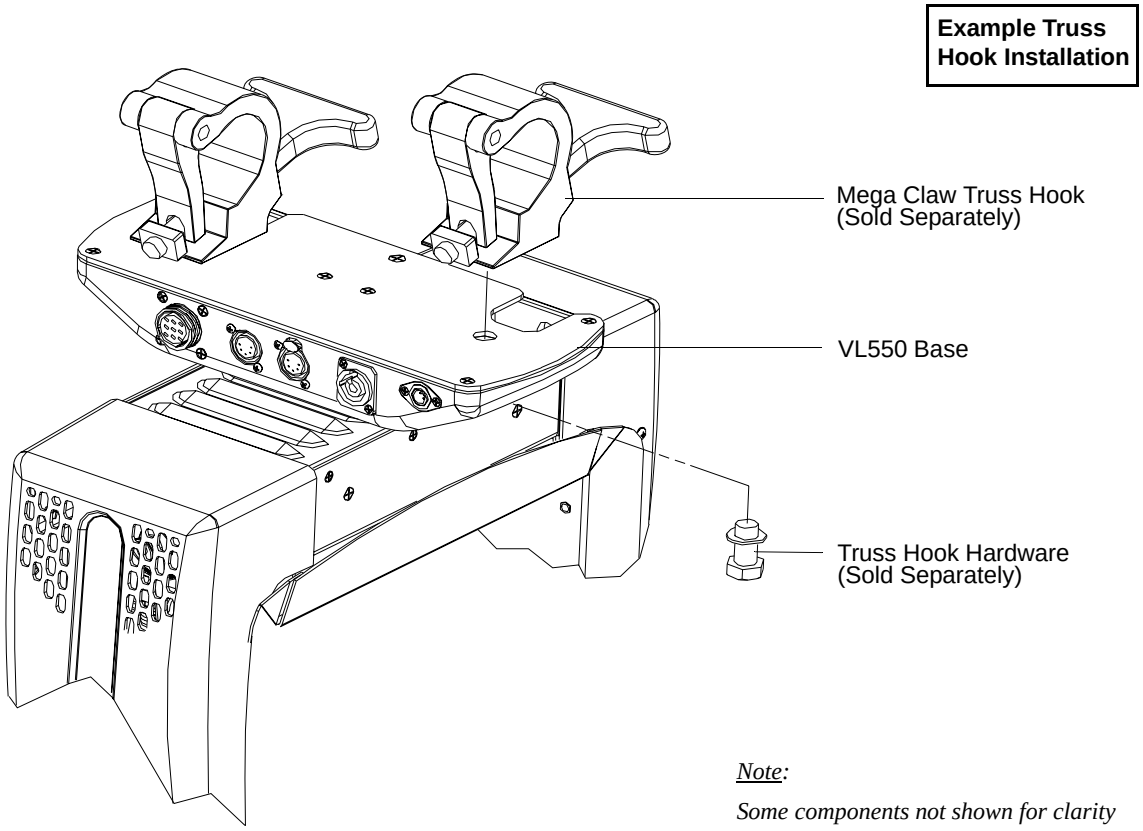

Figure 2-2: Installing Truss Hooks

Note: Various types of truss hooks can be used. The Mega Claw truss hook (as shown in the example above) as well as many other standard hooks, can be ordered separately.

Step 2. After installing truss hooks, the hooks should be oriented as shown in Figure 2-2 and Figure 2-4.

Installing in Truss:

Step 1. Using two people, lift luminaire into mounting position.

Step 2. Secure in place with truss hook. Ensure truss hook hardware that locks hook in place (e.g. wing bolt) is properly tightened and that luminaire is fully supported.

Step 3. Attach safety cable (as required) as follows:

a. Connect end of cable to luminaire cable mounting hole on front of foot.

b. Loop at least once around truss/pipe and attach other end of cable to cable mounting hole.

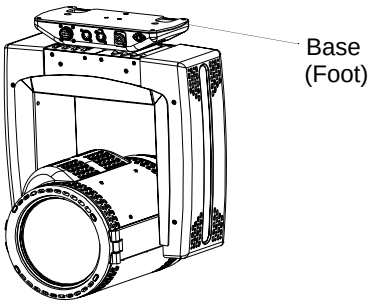

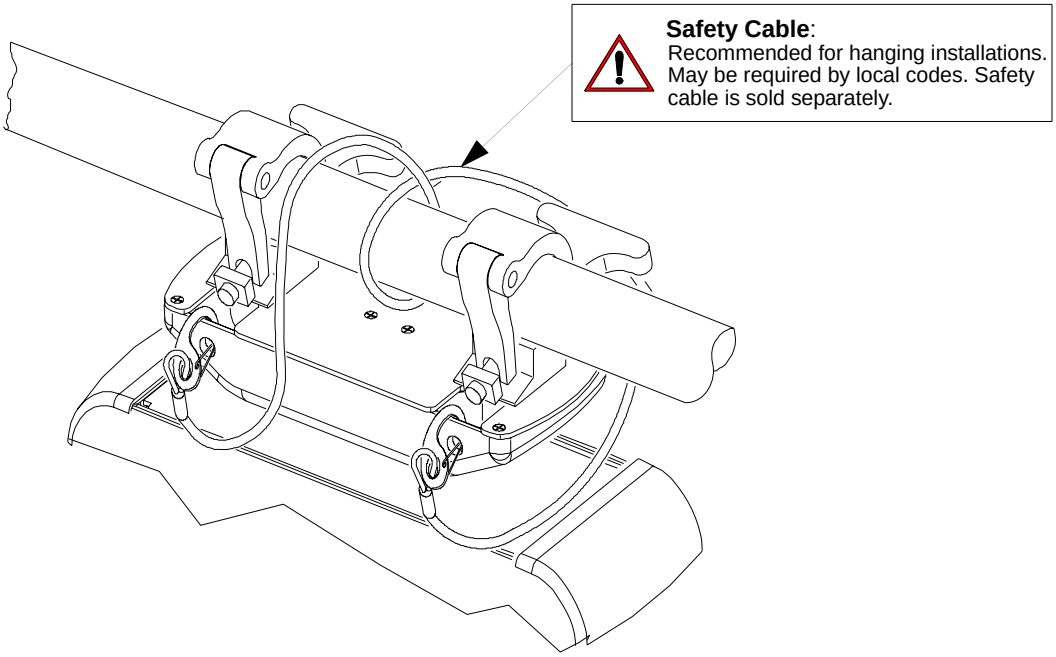

Note:

Some components not shown for clarity

Figure 2-3: Safety Cable Installation

Step 4. Make sure service tilt and pan locks are disengaged so luminaire moves freely.

Step 5. Connect power and data cables according to procedure given in "Connecting Data and Power" on page 19.

Center-to-Center Distance Table

Model	Distance
VL550	19.0"
VL550D	21.0"
VL550CD	25.0"

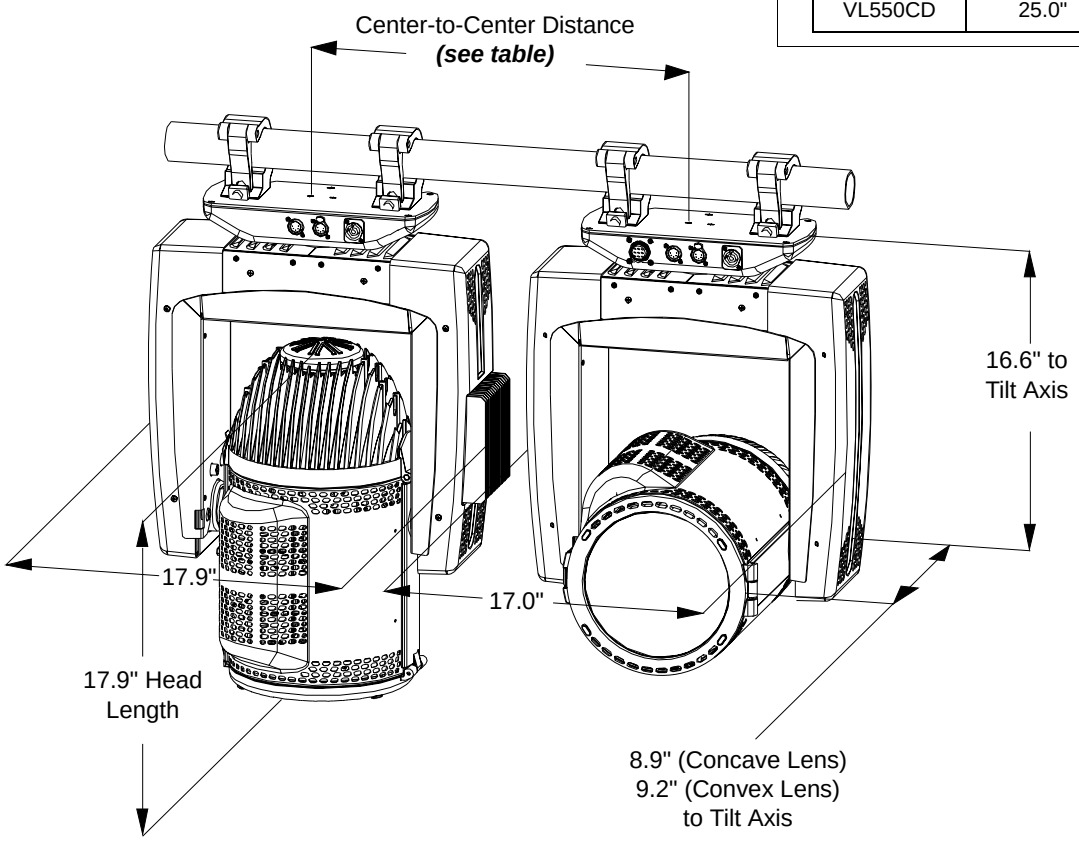

Figure 2-4: Hanging Dimensions and Clearances

Floor Mounting the Luminaire

VL550 wash luminaires are not designed nor sufficiently stable to sit directly on its base (foot) in a floor installation application without a suitable floor mount plate. When used in this type of application, attach a floor mounting plate to the base and make sure the mounting surface is flat and sturdy. Be sure to leave enough space around the luminaire to allow proper, uninterrupted airflow for cooling and movement; see Figure 2-4.

Connecting Data and Power

A maximum of 32 luminaires may be connected in any one DMX data link.

Note: This maximum limit applies to the luminaire "daisy chain" only. Your system or console may require fewer luminaires on a single data link path. Consult your console documentation for more information.

To connect power and data:

Step 1. Connect data cable from console to first luminaire in chain at DATA IN connector.

Step 2. If required, connect additional data cables from DATA THRU connectors to DATA IN connectors of remaining luminaires in link.

Step 3. At last luminaire in link, install male termination connector at DATA THRU connector. (Luminaires and other devices on the same DMX chain may not function properly without termination.)

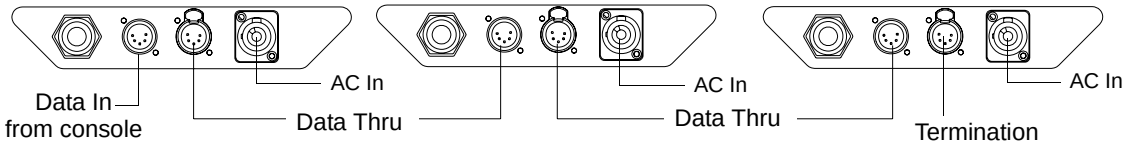

Figure 2-5: Data Link

Step 4. Connect AC Input Cable connector to power input source.

Step 5. Dress AC input and data cables and secure them so that they will not interfere with luminaire head and yoke movement.

Powering Up

Power-Up Procedure

All Models

When the luminaire is powered up for the first time, the default setting is enabled and the lamp will remain off. When AC power is applied, the luminaire will immediately begin a calibration sequence that steps it through full pan and tilt movements. The internal color and beam mechanisms will also move through a full range of motion. After calibration, the luminaire head will either stop at its "home" position (which positions the pan axis at mid-rotation and the head parallel to the yoke with the lens pointing away from the luminaire enclosure) or move to its current DMX-defined position if DMX data is present. All internal mechanisms also move to their "home" or DMX-defined positions.

CAUTION: Before applying power, be sure the luminaire is hung (or positioned), and the service tilt and pan locks are disengaged, so that the head and yoke can move freely without restriction.

To power up:

Step 1. At each luminaire, apply power connecting the power cable to the unit.

Step 2. Luminaire will automatically step through calibration and stop at "home" position (only if DMX is not present).

Addressing

Program Starting Address

The address setting for DMX console controlled systems is entered using the Menu Display (refer to "Menu Operation" on page 42). The luminaire retains the DMX address even if power is removed.

Note: Refer to your console operating instructions for specific information regarding its addressing requirements.

Program a DMX starting address:

Step 1. Press [Menu].

Step 2. Press [Up] / [Down] arrows until Address appears. Press [Enter].

Step 3. Press [Up] / [Down] arrows to scroll to starting address.

Step 4. Press [Enter] to set.

Program Starting Address Without Calibrating Luminaire

It is possible to bypass the calibration sequence and go directly to the Menu Display programming in order to pre-program an address setting.

Program starting address without calibrating luminaire:

- While powering up luminaire, press and hold [Menu].
- When display changes from "Starting" to the DMX address, program address as in Program Starting Address above.

Note: The luminaire will require a reset to restore control.

Transporting

Pack Up Cue

When shipping or transporting a VL550 wash luminaire, certain settings should be used to minimize the possibility of damaging internal components. Because of the complexity and delicate nature of the 48 panes of dichroic glass filters used in the VL550 wash luminaire, extra care should be observed to minimize damage.

As a precaution, Vari-Lite recommends the following settings as a "Pack-Up" cue before putting the luminaires in their flight cases and/or shipping boxes.

- The Pan should be set to 50% or a DMX value of 128.
- The Tilt should be set to 50% or a DMX value of 128.
- All Colors and Diffuser Glass should be set to 100% or a DMX value of 255.

WARNING: The Pan and Tilt service locks **SHOULD NOT** be engaged while shipping. These locks are for service only and are not designed to be engaged during transport.

WARNING: As with all automated luminaires, proper handling and suitable protective shipping cases should be used when transporting fixtures to reduce the risk of damage. For more information, please refer to Vari-Lite technical notice (TN-235) "Transportation and Shipping Case Requirements" in the "Support" area of the Vari-Lite web site.

Notes

CHAPTER 3.

Operation

This chapter contains instructions for operating the luminaire using DMX control and for updating the internal software.

- **Color Control**
- **DMX Operation**
- **DMX Mapping**
- **Luminaire Timing**
- **Updating Software**

Color Control

The VL550 Wash Luminaire's color system is composed of the patented DICRO*TUNE™, color mixing mechanism. The following sections describe the various components of the VL550 wash luminaire.

Crossfade Color Mixing

The color mixing mechanism is made up of two individual color bulkheads. These color mixing bulkheads are comprised of 16-radially mounted dichroic glass elements to provide full-spectrum color crossfades from pastel to saturated colors.

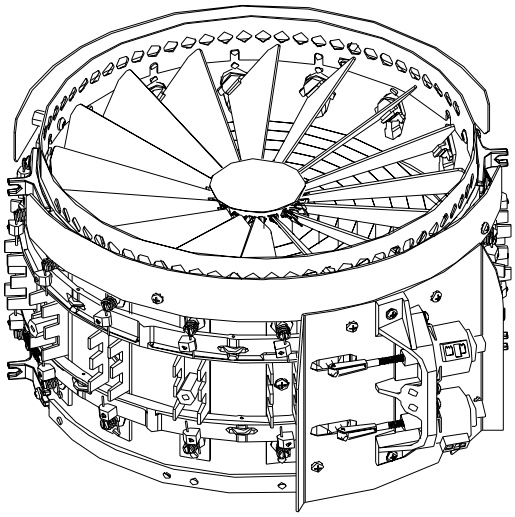

Front Bulkhead - Amber & Diffuser

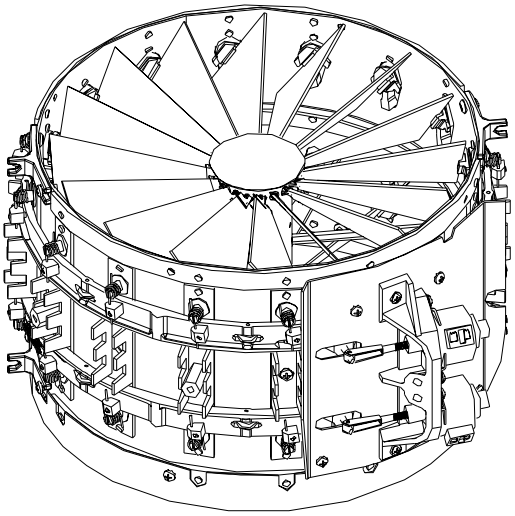

Rear Bulkhead - Magenta & Blue

Figure 3-1: VL550 Wash Color Bulkheads

DMX Operation

VL550 Wash Channel Mapping

These tables assume a DMX start address of 1. When a different starting address is used, this address becomes channel 1 function and other functions follow in sequence.

Figure 3-2: VL550 Wash Luminaire Channel Mapping

Parameters	Range	DMX Channels		
		Extended 16-Bit Mode	16-Bit Mode	8-Bit Mode
Intensity	0 (closed) - 255 (open)	1	1	1
Pan Hi Byte	0 - 65535	2	2	2
Pan Lo Byte		3	3	
Tilt Hi Byte	0 - 65535	4	4	3
Tilt Lo Byte		5	5	
Cyan Mixer	0 (open) - 255 (full saturation)	6	6	4
Yellow Mixer	0 (open) - 255 (full saturation)	7	7	5
Magenta Mixer	0 (open) - 255 (full saturation)	8	8	6
Diffuser	0 - 255	9	9	7
Zoom *(CD units only)*				
Focus Timing	0 (fast) - 255 (proportional)	10	-	-
Color Timing	0 (fast) - 255 (proportional)	11	-	-
Beam Timing	0 (fast) - 255 (proportional) ***Tungsten units only***	12	-	-
Not Used	Not Used	12	-	-
Control*	See Table 3-6 on page 36	13	10	8

***Notes:**

Use of Timing Channels: The default value setting in the profile should be 255 (proportional control) to allow smooth movement when using console timing. The Timing channel data should change as a snap. A zero value will give the fastest move but without any smoothing, this can look steppy in console-timed moves.

To use a timing channel instead of console timing it is necessary to set the timing channel to the desired value and set cue and/or parameter time to zero. A combination of time controls can produce unexpected results. Refer to "Luminaire Timing" on page 29 for more information.

Timing Channel Control: The luminaire uses the timing channel value to calculate a smooth continuous movement for a given time and transition.

Console Timing: The Console calculates the time duration between the DMX increments to be sent for a given time and transition.

Timing Channel Mapping:

Focus timing: Pan and Tilt

Color Timing: Cyan, Yellow, and Magenta.

DMX Mapping

CYM Crossfade Color Mixing and Dimming

CYM Crossfade Color Mixing

Table 3-1: DMX Map For CYM Crossfade Color Mixing

% Value	DMX Value	Action
0	0	Open (White)
100	255	Closed (Full Saturation)

Dimming

Table 3-2: DMX Map For Dimmer

% Value	DMX Value	Action
0	0	Closed
100	255	Open

Beam Control

Beam (Diffuser)

Table 3-3: DMX Map For Beam (Diffuser)

% Value	DMX Value	Action
0	0	Narrowest (far focus)*
100	255	Widest (near focus)*

* Depending on lens used.

Luminaire Timing

Luminaire Timing Channel Information

Timing channel control improves the timed moves of certain groups of parameters. Three timing channels are provided, one for Pan and Tilt, one for color parameters and one for beam parameters. Timing channels support time values of up to six minutes.

Table 3-4: Channel Function / Timing Channel Relationship

Channel Function	Timing Channel			
	Focus Time	Color Time	Beam Time	Intensity
Pan (Hi Byte/Lo Byte)	♦			
Tilt (Hi Byte/Lo Byte)	♦			
Color		♦		
Diffuser			♦	
Zoom *(CD units only)*			♦	

A timing value of zero is full speed. A time value of 100% (or 255 in DMX) causes the associated parameter(s) to follow cue fade time (console time) rather than the timing channel.

Note: The particular storing syntax for your console, as well as instructions on how to write part cues, can be found in the operation manual for that console.

To use these channels, you must:

Step 1. Create the cue, including color and diffuser as required.

Step 2. Decide which fixtures and which parameter groups will use timing channels.

Step 3. Assign a value to the particular timing channel(s) you wish to use (for timing information see chart on next page).

Step 4. Set console timing (or cue fade time) for parameters and timing channels to zero seconds.

Step 5. Store cue.

Note: Avoid changing timing channel values in a fading cue. This can cause unexpected behavior in the luminaire as the timing channel value is updated over time. Timing channel values and the final destination of the parameters affected by the timing channel should always be sent in a zero count.

Timing channels can be set in either % or 0-255 (DMX) modes, with the following values assigned:

Table 3-5: Timing Channels Map

% Value	DMX	= Seconds
	0	Full Speed
	1	0.2
	2	0.4
1	3	0.6
	4	0.8
2	5	1
	6	1.2
	7	1.4
3	8	1.6
	9	1.8
4	10	2
	11	2.2
	12	2.4
5	13	2.6
	14	2.8
6	15	3
	16	3.2
	17	3.4
7	18	3.6
	19	3.8
8	20	4
	21	4.2
	22	4.4
9	23	4.6
	24	4.8
10	25	5
	26	5.2
	27	5.4
11	28	5.6
	29	5.8
	30	6
12	31	6.2
	32	6.4
13	33	6.6
	34	6.8
	35	7.0
14	36	7.2
	37	7.4
15	38	7.6
	39	7.8

Table 3-5: Timing Channels Map (Continued)

% Value	DMX	= Seconds
	40	8
16	41	8.2
	42	8.4
17	43	8.6
	44	8.8
	45	9
18	46	9.2
	47	9.4
19	48	9.6
	49	9.8
	50	10
20	51	10.2
	52	10.4
	53	10.6
21	54	11
	55	11
22	56	12
	57	12
	58	13
23	59	13
	60	14
24	61	14
	62	14
	63	15
25	64	15
	65	16
26	66	16
	67	16
	68	17
27	69	17
	70	18
28	71	18
	72	18
	73	19
29	74	19
	75	20
30	76	20
	77	20
	78	21
31	79	21
	80	21
	81	22

Table 3-5: Timing Channels Map (Continued)

% Value	DMX	= Seconds
32	82	22
	83	23
33	84	23
	85	23
	86	24
34	87	24
	88	25
35	89	25
	90	25
	91	26
36	92	26
	93	27
37	94	27
	95	27
	96	28
38	97	28
	98	29
39	99	29
	100	29
	101	30
40	102	30
	103	30
	104	31
41	105	31
	106	32
42	107	32
	108	32
	109	33
43	110	33
	111	34
44	112	34
	113	34
	114	35
45	115	35
	116	36
46	117	36
	118	36
	119	37
47	120	37
	121	38
48	122	38
	123	38

Table 3-5: Timing Channels Map (Continued)

% Value	DMX	= Seconds
	124	39
49	125	39
	126	39
	127	40
50	128	40
	129	41
51	130	41
	131	41
	132	42
52	133	42
	134	43
53	135	43
	136	43
	137	44
54	138	44
	139	45
55	140	45
	141	45
	142	46
56	143	46
	144	47
57	145	47
	146	47
	147	48
58	148	48
	149	49
59	150	49
	151	49
	152	50
60	153	50
	154	50
	155	51
61	156	51
	157	52
62	158	52
	159	52
	160	53
63	161	53
	162	54
64	163	54
	164	54
	165	55

Table 3-5: Timing Channels Map (Continued)

% Value	DMX	= Seconds
65	166	55
	167	56
66	168	56
	169	56
	170	57
67	171	57
	172	58
68	173	58
	174	58
	175	59
69	176	59
	177	59
	178	60
70	179	60
	180	65
71	181	65
	182	65
	183	70
72	184	70
	185	75
73	186	75
	187	75
	188	80
74	189	80
	190	85
75	191	85
	192	85
	193	90
76	194	90
	195	95
77	196	95
	197	95
	198	100
78	199	100
	200	110
79	201	110
	202	110
	203	120
80	204	120
	205	120
81	206	130
	207	130

Table 3-5: Timing Channels Map (Continued)

% Value	DMX	= Seconds
	208	140
82	209	140
	210	140
	211	150
83	212	150
	213	160
84	214	160
	215	160
	216	170
85	217	170
	218	180
86	219	180
	220	180
	221	190
87	222	190
	223	200
88	224	200
	225	200
	226	210
89	227	210
	228	210
	229	220
90	230	220
	231	230
91	232	230
	233	230
	234	240
92	235	240
	236	250
93	237	250
	238	250
	239	260
94	240	260
	241	270
95	242	270
	243	270
	244	280
96	245	280
	246	290
97	247	290
	248	290
	249	300

Table 3-5: Timing Channels Map (Continued)

% Value	DMX	= Seconds
98	250	300
	251	310
99	252	310
	253	310
	254	310
100	255	Follows Cue Data

Control Channel Functions

The following control actions must be accomplished with zero time transition or with timing disabled. Discrete values must be used and not manual controls such as faders or encoders.

Table 3-6: Control Channel Functions

Control Channel Function	Control Channel Value		
	% Value	DMX Value	After 3 Secs
Soft Reset	33	81 - 87	0
Lamp On*	99 - 100	249 - 255	0
Lamp Off*	66	165 - 171	0
***Note**: Remaining DMX values are for future use.*			

*For Arc and CD Models only.

To use control channel functions:

Step 1. Select an action to be sent.

Step 2. Set control channel value for desired action (for example, 84 for reset). Hold value for 3 seconds.

Note: A numerical keypad is required for sending values. An encoder or fader does not allow for a "snap" value change, which is required to affect the control functions.

Step 3. Set control channel value to zero. (This must occur without any scaling values. Action will be voided if other values are detected between action value and zero.)

Updating Software

USB Download and Programming

To download files with a PC equipped with a Universal Serial Bus (USB) port, you need the VARI✻LITE USB Luminaire Programming Kit (28.8500.0054). The USB Luminaire Programming Kit can be ordered directly from your Authorized VARI✻LITE Dealer.

The VARI✻LITE USB Luminaire Programming Kit (28.8500.0054) includes:

- VARI✻LITE USB Upload Cable (25.9600.0001)
- USB Luminaire Programming Kit CD (87.8500.0002)
- Instruction Sheet (02.8500.0100)
- VARI✻LITE carry bag (07.5044.0005)

Computer Requirements for the USB Luminaire Programming Kit

- PC running Windows 98, 2000, XP, or Vista. Although the USB Luminaire Programming kit software is not directly compatible with Apple Macintosh® computers, it does run with some Windows emulators.
- In addition to Windows, your computer must be running IE 5.01 or later, and Microsoft.NET Framework Version 3.5 (or later), which you can download from http://www.microsoft.com and search for .NET Framework downloads.
- An available USB 2.0 port on the PC.

USB VLDownloader PC Program and .bin Luminaire Files

The USB VLDownloader program and current .bin files are available from the Product Downloads page at www.vari-lite.com. Instructions for installing the USB VLDownloader program on your PC are also available on the Product Downloads page. Use the USB VLDownloader program to transfer updated versions of the luminaire operating software (.bin files) from your PC to the luminaires.

Note: Refer to instruction sheet 02.8500.0100 for detailed programming instructions for VARI✻LITE luminaires.

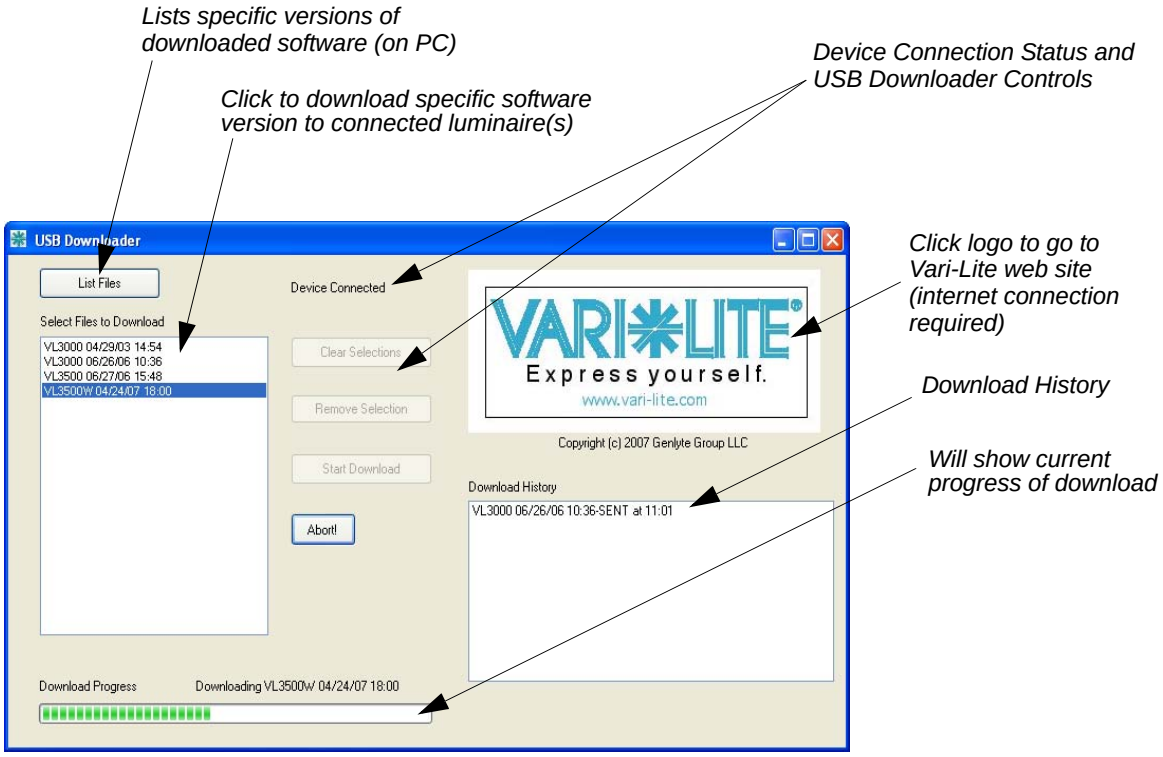

Figure 3-3: VL Download Program Window

Transferring Software From Luminaire to Luminaire

It is possible to transfer specific software versions between luminaires. As in the case of installing new software versions, multiple luminaires can be programmed at the same time if they are data linked together (refer to "Connecting Data and Power" on page 19), however a maximum of 32 luminaires can be updated at once.

Hardware Requirements

Data cables used in this process must have two twisted pairs and a shield. It is also recommended that cables meet all other USITT DMX specification requirements. Refer to "Data Cables" on page 13.

A DMX termination connector is used in this process. Refer to page 15 for more information regarding the construction of this connector.

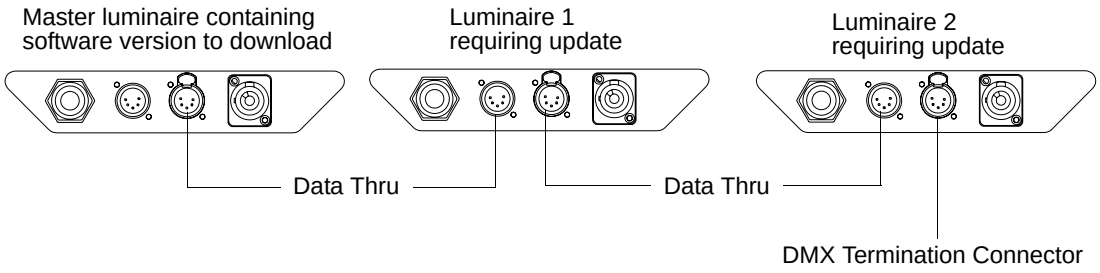

Figure 3-4: Software Transfer Setup

Transfer Procedure

This procedure is used to transfer software versions between luminaires.

Step 1. At last luminaire, install DMX termination connector into DATA THRU XLR connector.

Step 2. At master luminaire (first in chain) Menu Display, press [Menu].

Step 3. Press [Up] / [Down] arrows until Fixture appears.

Step 4. Press [Up] / [Down] arrows until Download appears. Press [Enter].

Step 5. OK? will be displayed. Press [Enter] to accept.

Step 6. Download will proceed. (Download will take 4-5 seconds.) The number of blocks displayed will be less in a luminaire-to-luminaire download than in a PC-to-luminaire download for the same software version.

Step 7. Once download is complete, luminaire will automatically recalibrate. Once recalibration is complete, reset (recalibrate again) luminaire.

Verify software version at luminaire:

Step 1. At Menu Display, press [Menu].

Step 2. Press [Up] / [Down] arrows until Fixture appears. Press [Enter].

Step 3. Press [Up] / [Down] arrows until Version appears. Press [Enter].

The first half of the version will be displayed as a date (MM/DD/YY). For example, 03/18/03 (March 18, 2003).

Press [Enter] to display second half of version. This will be displayed as a time (HH:MM). For example, 16.36 = 4:36 pm)

Notes

CHAPTER 4.

Menu System

This chapter contains instructions for operating the luminaire using the Menu Display feature.

- **Menu Operation**
- **Self Tests**

Menu Operation

What Is the Menu System?

The menu system is controlled by four buttons. These buttons function as follows:

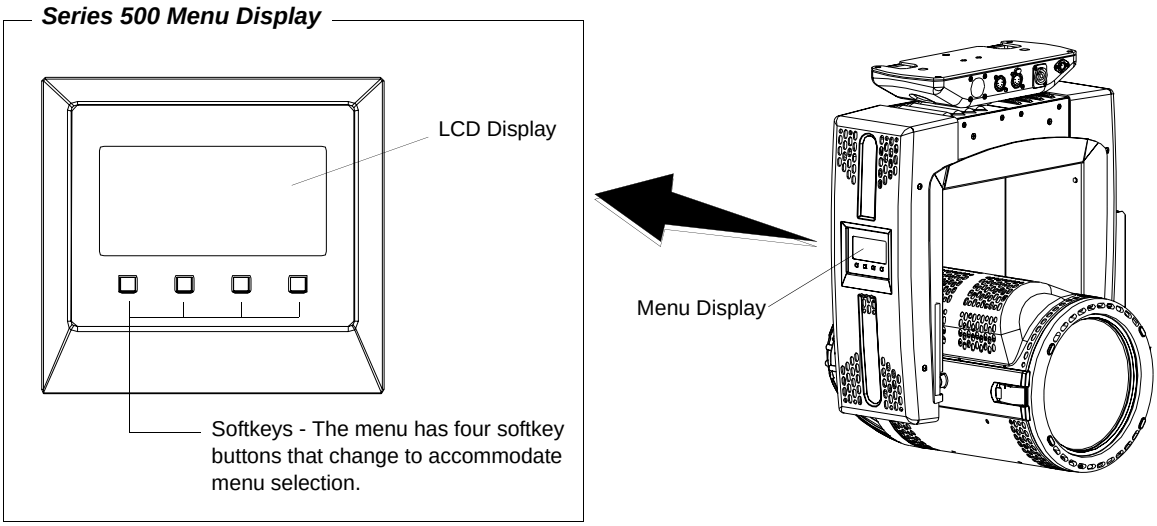

Figure 4-1: Menu Display Location

The menu offers four softkey button that change dynamically according to the menu selected at each level. To enter the menu system, first press [Menu]. The functions displayed will be 1st level functions. Scroll through the 1st level functions by pressing [Up] / [Down] arrows. Once the desired function appears in the display, press [Enter]. You are now at the 2nd level. Once again, press the [Up] / [Down] arrows to scroll through 2nd level functions. Press [Enter] to access 3rd level functions and so forth. When the highest level for the function is reached, [Up] / [Down] arrows can be pressed to select a value or select a toggle activation such as ON/OFF. Press [Enter] to store the value or select an action. Some of the softkey buttons offered are:

[Menu] button Displays the menu, or if at first level, the current address. Can also enable menu to exit a menu level.

[Enter] button Selects the current menu option or stores current data value.

[Up] arrow Scrolls menu options upward or increases current data value.

[Down] arrow Scrolls menu options downward or decreases current data value.

For example, the Address function has one sub-level: DMX. The Address function is a 2-level menu.

1st Level	2nd Level
Address →	*DMX (value xxx)*

* The arrows will have opposite functions if the luminaire is hung upside down in a hanging orientation (if the orientation is changed via the menu selection feature). In other words, the arrow pointing downward always functions as down/decrease and the arrow pointing upward always functions as up/increase regardless of the luminaire orientation.

The menu system is a programmable set of commands used to configure, address, operate, and test the luminaire. The menu system is controlled at the Menu Display available at the enclosure input panel.

The menu system has seven main functions which are referred to as “1st level.” Within these main functions, there can be up to four additional sub-functions (levels 2 thru 5), making five total levels.

To enter the menu system, first press [Menu]. The functions displayed will be 1st level functions. Scroll through the 1st level functions by pressing [Up] / [Down] arrows. Once the desired function appears in the display, press [Enter]. You are now at the 2nd level. Once again, press the [Up] / [Down] arrows to scroll through 2nd level functions. Press [Enter] to access 3rd level functions and so forth. When the highest level for the function is reached, [Up] / [Down] arrows can be pressed to enter a value or select a toggle activation such as On/Off. Press [Enter] to store the value or select an action.

For example:

1st Level		2nd Level		3rd Level
Test	→	ALL SEQ	→	RUN TEST

Default State

The menu display’s default state during normal operation is to display the DMX address. After 10 seconds of inactivity at the display, it will change to the default state.

After longer periods of inactivity, the backlight in the menu display will switch to its off state. The default state for this feature is 5 minutes, however, different time lengths can also be programmed. If display turns off, always hit [Menu] to reactivate.

To program a different time length for menu off feature:

Step 1. Press [Menu].

Step 2. Press [Up] / [Down] arrows until Config (Configuration) appears. Press [Enter].

Step 3. Press [Up] / [Down] arrows to access Display. Press [Enter].

Step 4. Press [Up] / [Down] arrows to select either 30 Sec (30 seconds), 5 Min (5 minutes), 10 Min (10 minutes), or ON (on indefinitely). Press [Enter] to set.

Shortcuts

A few button combinations are provided as shortcuts for frequently used menu functions. These shortcuts are as follows:

- Pressing [Enter] and [Up] at the same time = Lamp On (Arc fixtures only)
- Pressing [Enter] and [Down] at the same time = Lamp Off (Arc fixtures only)
- Pressing [Menu] and [Up] at the same time = Recalibrate
- Pressing [Menu] at Power up interrupts calibration. See “Program Starting Address Without Calibrating Luminaire” on page 22 for more information.
- Pressing [Menu] and [Down] at the same time = flips display (when auto orientation is off).

Menu System Overview

The following is a graphic representation of the entire menu system.

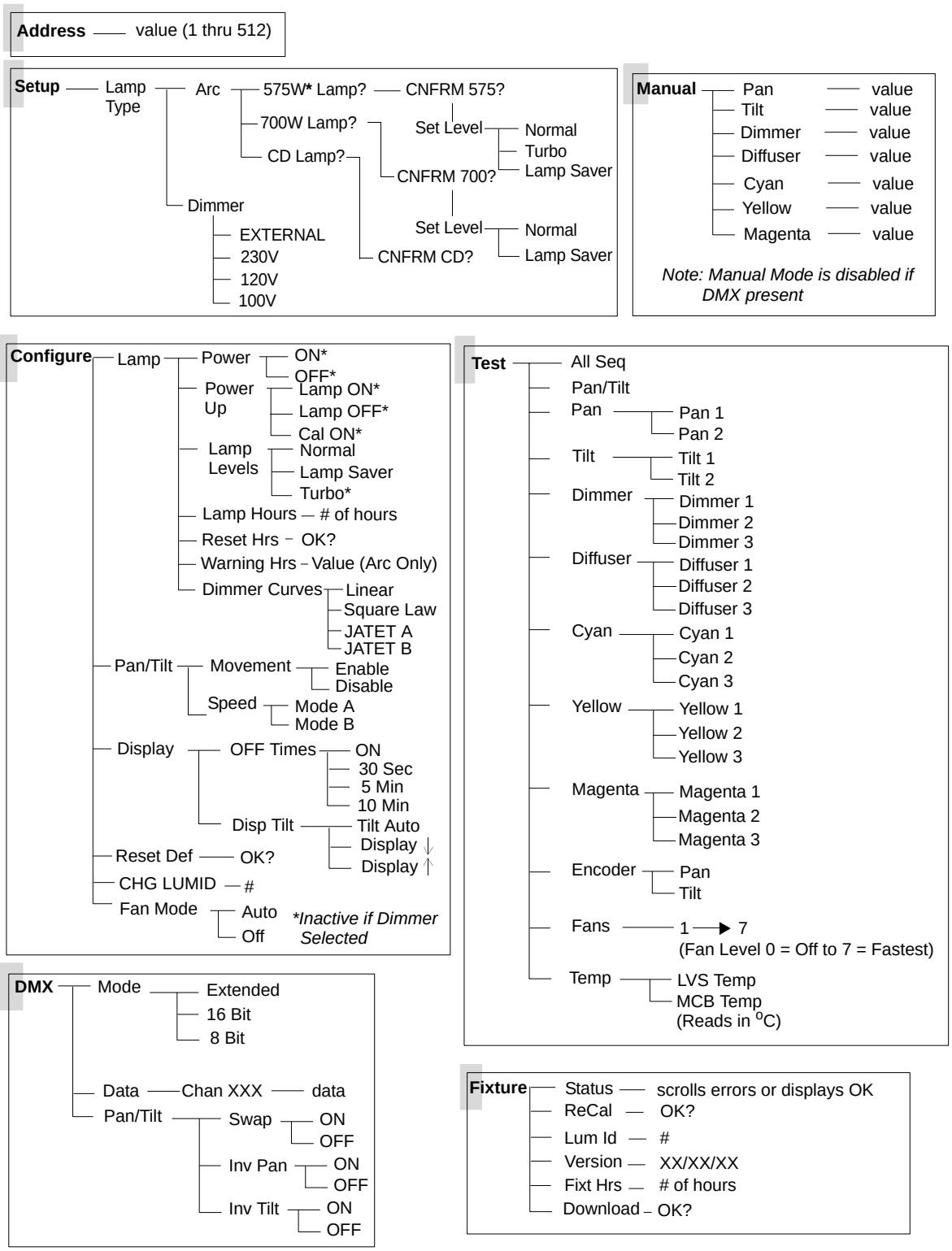

Menu System Functions

Table 4-1: Menu System Chart

1st Level	2nd Level	3rd Level	4th Level	5thLevel
Address *DMX Address*	**XXX** *Address value*			
SetUp *Luminaire Set Up*	**Lamp Type**	**Arc**	575W* LAMP? / CNFIRM 575?	Normal
				Turbo
				Lamp Saver
			700W LAMP? / CNFIRM 700?	Normal
				Lamp Saver
			CD Lamp? / CNFIRM CD?	
		Dimmer	**External** *External Dimmer*	
			230V *Internal Dimmer Voltage Setting (For use with the Internal 230V IGBT Dimmer Only)*	
			120V *Internal Dimmer Voltage Setting (For use with the Internal 120V IGBT Dimmer Only)*	
			100V *Internal Dimmer Voltage Setting (For use with 120V IGBT Dimmer Only)*	

Table 4-1: Menu System Chart (Continued)

1st Level	2nd Level	3rd Level	4th Level	5thLevel
Configure *System Configuration*	**Lamp** *Lamp Options* ** These lamp options are inactive (disabled) if external dimmer is selected in SetUp.*	**Power** * *Lamp Power (arc only)*	**ON** * (default)	
			OFF	
		Power Up * *Lamp Power-up State (arc only)*	**Lamp ON** * *Lamp On* (default)	
			Lamp OFF * *Lamp Off*	
			Cal ON * *On after Calibration*	
		Lamp Levels * *Lamp Drive Selection (depends on Lamp Type chosen in Setup)*	**Normal *** *Normal Drive lamp for standard output*	
			Lamp Saver * *Drive lamps for prolonged lamp life*	
			Turbo * *Increased Drive lamp for more output*	
		Lamp Hour *Lamp Hours Used (arc only)*	**XXXX** *Cumulative # of Operation Hours* (Not editable)	
		Reset Hrs *Reset Lamp Hour Counter (arc only)*	**OK?**	
		Warning Hrs *Lamp Hour Progress Bar (arc only)*	**Value** *Number of hours to be displayed by bar*	
		Dimmer Curves *Dimmer curve set up (tungsten only) (arc curve is linear and determined by mechanical dimmer wheel)*	**Linear** *Standard linear dimming curve*	
			Square Law *IES square wave sine dimming curve*	
			JATET A *Japanese JATET A dimming curve*	
			JATET B *Japanese JATET B dimming curve*	
	Pan/Tilt *Pan and Tilt Options*	**Movement** *Position Recovery*	**Enable** *Enable*	
			Disable *Disable*	
		Speed *Two operational speed settings*	**Mode A** *Increased Responsiveness*	
			Mode B *Normal*	
	Display *Display Illumination*	**OFF Times** *Display state*	**ON** *ON indefinitely*	
			30sec *OFF in 30 seconds*	
			5Min *OFF in 5 minutes (default)*	
			10Min *OFF in 10 minutes*	
		DISP TILT *Display orientation*	**Tilt Auto** *Auto orientation*	
			Display *Orientation is always down*	
			Display *Orientation is always up*	
	Reset Def *Reset Default Values*	**OK?**		
	ChgLumID *Change Lum ID*	*### Set Number*		
	Fan Mode *Fan Operation*	**Auto** *Fans operate normally*		
		Off *Fans are off and will not operate*		

Table 4-1: Menu System Chart (Continued)

1st Level	2nd Level	3rd Level	4th Level	5thLevel
DMX *DMX Data and Pan/Tilt*	**Mode**	**Extended** *Operates in extended 16 bit mode*		
		16 Bit *Operates in standard 16 bit mode*		
		8 Bit *Operates in 8 bit mode*		
	Data	**Chan XX** *DMX Channel*	**XXXX** *Data*	
	Pan/Tilt *Pan/Tilt Options*	**Swap** *Swap Pan & Tilt*	**ON**	
			OFF (default)	
		InvPan *Invert Pan*	**ON**	
			OFF (default)	
		InvTilt *Invert Tilt*	**ON**	
			OFF (default)	
Fixture	**Status***Status/Error Display*	Scrolls error messages or displays **OK**		
	Re-Cal *Recalibrate*	**OK?**		
	Lum Id *Luminaire ID*	**XXXX.** *Luminaire ID Number*		
	Version *Software Version*	**XX/XX/XX** *Version Date*		
	Fixt Hrs *Fixture Hours On (powered)*	**XXXX** *Hours*		
	Download *Download Program to Luminaires*	**OK?**		
Manual *Manual Commands*	**Pan** *Pan Motor*	**XXXX** *Data*		
	Tilt *Tilt Motor*	**XXXX** *Data*		
	Dimmer * *Dimmer*	**XXX** *Data*		
	Diffuser *Diffuser*	**XXX** *Data*		
	Cyan *Cyan Color*	**XXX** *Data*		
	Yellow *Yellow Color*	**XXX** *Data*		
	Magenta *Magenta Color*	**XXX** *Data*	↓	

↑

* = Inactive/Disabled when "External" Dimmer setting is selected. "Turbo" = 575W only (now discontinued).

Table 4-1: Menu System Chart (Continued)

1st Level	2nd Level	3rd Level	4th Level	5thLevel
Test ** *System Test*	**ALL SEQ** *Sequence Through All Tests*	**RunTest**	Press [Menu] to stop tests	
	Pan/Tilt *Pan/Tilt*	**RunTest**		
	Pan *Pan*	**Pan 1**		
		Pan 2		
	Tilt *Tilt*	**Tilt 1**		
		Tilt 2		
	Dimmer *Dimmer*	**Dimmer 1**		
		Dimmer 2		
		Dimmer 3		
	Diffuser *Diffuser*	**Diffuser 1**		
		Diffuser 2		
		Diffuser 3		
	Cyan *Cyan Color System*	**Cyan 1**		
		Cyan 2		
		Cyan 3		
	Yellow *Yellow Color System*	**Yellow 1**		
		Yellow 2		
		Yellow 3		
	Magenta *Magenta Color System*	**Magenta 1**		
		Magenta 2		
		Magenta 3		
	Encoder *Encoder (Allows hand movement to check values)*	**Pan**	**Value** *Displays encoder value*	
		Tilt	**Value** *Displays encoder value*	
	Fans *Fans Test*	**Value** *1 (slow) to 7 (fastest)*		
	Temp *Temperature*	**LVS Temp** *Low Voltage Supply temperature*	**Value** *Displays temperature in ^{o}C*	
		MCB Temp *Main Control Board temperature*	**Value** *Displays temperature in ^{o}C*	

* = Inactive/Disabled when "External" Dimmer setting is selected.

** Refer to "Diagnostic Tests" on page 53 for more information.

Function Definitions

Each menu item is listed in the first column by its display abbreviation. The abbreviations appear in alphabetical order as opposed to their position in the menu display sequence for easy reference.

Table 4-2: Menu Function Definitions

Display	Definition	Purpose
10Min	10 Minutes	Sets Menu Display to automatically shut off after 10 minutes of non-use.
100V	230V IGBT Dimmer Setting	(**DIMMER**) setting - for setting/identifying the internal IGBT dimmer to 100V *(For use with the Internal 120V IGBT Dimmer Only)*
120v	120V IGBT Dimmer Setting	(**DIMMER**) setting - for setting/identifying the internal IGBT dimmer to 120V *(For use with the Internal 120V IGBT Dimmer Only)*
230v	230V IGBT Dimmer Setting	(**DIMMER**) setting - for setting/identifying the internal IGBT dimmer to 230V *(For use with the Internal 230V IGBT Dimmer Only)*
30sec	30 Seconds	Sets Menu Display to automatically shut off after 30 seconds of non-use.
5Min	5 Minutes	Sets Menu Display to automatically shut off after 5 minutes of non-use.
Address	Address	Accesses functions for setting luminaire starting address in DMX (**DMX**) controlled systems.
ALL SEQ	All Sequence	Performs all tests in sequential order.
Cal ON	On after Calibration	Configures arc luminaire so that lamp will strike after calibration procedure is complete.
CD	CD Lamp	Selects to CD Lamp Setting *(VL550CD models only)*
Chan XX	DMX Channel	Specifies DMX channel for display of current data value.
ChgLumID	Change the luminaire ID number	Allows access to change or set the luminaire ID number.
Configure	System Configuration	Accesses functions for setting lamp start up, pan/tilt, Menu Display, changing luminaire ID, and resetting luminaire default values.
Cyan	Cyan Color System	Specifies Cyan color system for manual control (**Manual**) or for testing (**Test**).
Data	DMX Data	Accesses function for displaying DMX data by channel number and type. Also references DMX address.
Diffuser	Diffuser	Specifies diffuser function for manual control (**Manual**) or for testing (**Test**).
Dimmer	Dimmer	Specifies dimmer function for manual control (**Manual**) or for testing (**Test**).
Dimmer Curves	Dimming Curve Selection	Specifies dimmer curve selection (Linear, Square Law, JATET A, or JATET B).
Disable	Disable	Disables a function.
Display	Display Illumination	Accesses options for Menu Display on and off times.
DMX	DMX	Accesses functions for setting DMX mode or pan/tilt options.
Download	Download	Downloads program to luminaires.
Enable	Enable	Enables a function.
Encoder	Encoders	Accesses pan or tilt encoder for diagnostic testing (**Test**).
External	External Dimmer	Sets luminaire to operate with an external dimmer.
Fan Mode	Fan Mode	Sets the luminaires to operate normally (**Auto** -fans engage when preset thermal limits are surpassed) or off (**Off**).
Fans	Fan Speed	Tests luminaire's fan speed (0 = off to 7 = fastest).

Table 4-2: Menu Function Definitions (Continued)

Display	Definition	Purpose
FAIL	Test Fail	Indicates that sensor test has failed.
Fixt Hrs	Fixture Hours	Displays total number of hours luminaire has been powered on.
Fixture	Fixture	Access luminaire specification information such as software version, along with status information and download function.
InvPan	Invert Pan	Reverses pan action for special focus requirements.
InvTilt	Invert Tilt	Reverses tilt action for special focus requirements.
JATET A	JATET A Dimming Curve	Selects JATET A (Japanese dimming standard) dimmer curve operation.
JATET B	JATET B Dimming Curve	Selects JATET B (Japanese dimming standard) dimmer curve operation.
Lamp Saver	Lamp Saver Drive Option	Sets the luminaire to decreased lamp drive to prolong lamp life.
Lamp Type	Lamp Options	For accessing lamp options and configuration (**Config**) or for Setup to set lamp type.
Lamp OFF	Lamp Off	Configures arc luminaire to douse lamp on manual command. *(Arc and CD models only)*
Lamp ON	Lamp On	Configures arc luminaire to strike lamp on manual command. *(Arc and CD models only)*
Lamp Hours	Lamp Hours	Displays total number of lamp operating hours. *(Arc and CD models only)*
Linear	Linear Dimming Curve	Selects Linear dimmer curve operation.
LumId	Luminaire ID	Displays unique ID number for the luminaire.
Magenta	Magenta Color System	Specifies Magenta color system for manual control (**Manual**) or for testing (**Test**).
Manual	Manual Commands	Accesses functions for controlling luminaire mechanisms and timing by entry of an absolute data value.
Mode A	Pan/Tilt Operation	Selects increased responsiveness mode to Pan/Tilt DMX commands.
Mode B	Pan/Tilt Operation	Selects normal responsiveness mode to Pan/Tilt DMX commands.
Movement	Movement	Enables and disables pan and tilt movement and auto-correction.
NoProg	No Program	Indicates that there is no software present in the luminaire.
Normal	Normal	Sets lamp input drive level to normal drive.
OFF	Off	Turns off a function.
OK	Okay	Indicates that luminaire is ready to accept commands.
OK?	Okay?	Prompt for pressing [Enter] before an action is executed.
ON	On Indefinitely	Sets Menu Display to stay on until programmed otherwise (**Display**), turns on a function, or turns on a menu item.
Pan/Tilt	Pan/Tilt	Accesses pan and tilt options for DMX function, system configuration, and testing.
Pan	Pan	Specifies pan function for manual control (**Manual**) or pan encoder for testing (**Test**).
PASS	Test Pass	Indicates that sensor test has passed.
Power	Lamp Power	Accesses function to turn lamp on or off.
Power Up	Lamp Power Up	Accesses options for lamp power up: on, off, or after calibration.

Table 4-2: Menu Function Definitions (Continued)

Display	Definition	Purpose
Re-cal	Recalibrate	Recalibrates luminaire.
Reset Def	Reset Default	Resets default system configuration values.
Reset Hrs	Reset Lamp Info	Resets lamp hour counter. For use when new lamp is installed.
RunTest	Run Test	Indicates that a system test is in progress.
SetUp	Luminaire Set Up	For selecting which color type (**Standard** or **Pastel**) and lamp used in luminaire.
Square Law	Square Law Dimming Curve	Selects IES standard sine-wave type dimmer curve operation.
Status	Status/Error Display	Provides the status of the fixture (**Fixture**) and any error messages.
Swap	Swap	Swaps pan and tilt functions for special focus requirements such as moving mirror mechanisms.
Temp	Temperature	Displays the temperature at the LVS (Low Voltage Supply) or MCB (Main COntrol Board) in degrees C.
Test	System Tests	Accesses diagnostic tests for luminaire's mechanisms.
Tilt	Tilt	Specifies tilt function for manual control (**Manual**) or tilt encoder for testing (**Test**).
Version	Software Version	Displays current software version by date (**XX/XX/XX**).
Warning Hrs	Lamp usage hours (progress bar)	Selects the amount of hours to be displayed by the lamp hour usage progress bar. Note, this is for quick reference only - for actual lamp hours, see **Lamp Hours**.
Yellow	Yellow Color System	Specifies Yellow color wheel for manual control (**Manual**) or for testing (**Test**).

Self Tests

Running Parameter Tests

The luminaire is capable of running self tests by using the TEST menu functions. For complete details and values for each test refer to "Diagnostic Tests" on page 53.

When running tests on multiple luminaires, a DMX termination connector is required at the last luminaire in the link. (Refer to page 15 for more information regarding the construction of this connector.)

Note: There is a known issue with all versions of code for the Series 550 Wash Luminaire concerning the "Test" menu options. Issues arose when running a test from one Series 550 Wash Luminaire to multiple Series 550 Wash Luminaires (of a different type) across the VL550 Wash platform. To alleviate this, when testing in groups, only test same Lamp Type luminaires (for example: VL550 wash [120V/1200W tungsten] wash with other VL550 wash [120V/1200W tungsten] lights, etc.). The issue, described above, does not pose any problems when operating Series 550 Wash Luminaires during normal operation under DMX control.

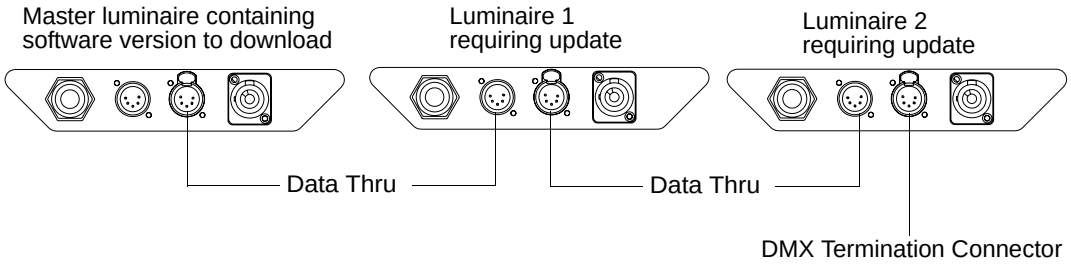

Figure 4-2: Test Setup

To run tests:

Step 1. Press [Menu].

Step 2. Press [Up] / [Down] arrows until Test appears. Press [Enter].

Step 3. Use [Up] / [Down] arrows to select a parameter to test. Refer to "Menu System Functions" on page 45 for a complete list of test parameters which can be chosen.

Step 4. Press [Enter] to run test.

Step 5. Press [Menu] to stop test at any time.

Note: Connected luminaires may not respond on the first action (may delay) of the master luminaire.

Movement Disable

The Movement option allows pan and tilt to be disabled so that the luminaire can be placed in any position for testing without movement occurring. In order to regain full control of the luminaire, Movement will need to be enabled after testing.

Note: When using the Movement option, pan and tilt will be disabled for all the luminaires that are linked.

To set movement option:

Step 1. Press [Menu].

Step 2. Press [Up] / [Down] arrows until Config appears. Press [Enter].

Step 3. Press [Up] / [Down] arrows until Pan/Tilt appears. Press [Enter].

Step 4. Movement will be displayed. Press [Enter].

Step 5. Use [Up] / [Down] arrows to select Enable or Disable. Press [Enter] to select.

Diagnostic Tests

The following diagnostic tests are available in the test menu.

Test Descriptions

All Seq..... Tests all functions in sequential order.
Pan/Tilt..... Tests different pan and tilt movements.
Pan..... Tests different pan movements.
Tilt ..... Tests different tilt movements.
Dimmer..... Tests different dimmer operation.
Diffuser..... Tests diffuser movement.
Cyan..... Tests Cyan color wheel movements.
Yellow..... Tests Yellow color wheel movements.
Magenta ..... Tests Magenta color wheel movements.
Encoder..... Disables pan and tilt and displays encoder value.
Fan..... Tests fan level (speed 1 to 7, 7 is fastest).
Temperature..... Displays LVS or MCB temperatures (in ^{o}C).

Notes

APPENDIX A.

Maintenance

This appendix provides instructions for performing routine maintenance which may be necessary during the life of the luminaire.

- **Equipment Handling**
- **Routine Maintenance**

WARNING: All maintenance procedures are to be performed with power removed from the luminaire. Never remove covers or open front lens or backcap assemblies while lamp is in operation.

Equipment Handling

Below are some basic tips and information on handling luminaires and their associated components.

Locations/Use

VARI✻LITE luminaires are designed for dry locations only. Exposure to rain or moisture (including, but not limited to, fog machines, misters, etc.,) may damage luminaire.

Lamps

Servicing

- When handling a lamp, hold it by the ceramic base while wearing cotton gloves or finger cots. Do not touch the glass envelope (bulb). If you touch the glass with bare fingers, immediately wipe off any fingerprints with isopropyl alcohol.
- Use care when opening and closing the rear castings (or covers) of luminaires and cleaning reflectors. Any jarring can undo the optical alignment of the lamp.

Heat

On Forced Air Cooled Units

- When lamps are lit, the interior of the luminaires becomes very hot. To aid in the airflow circulation within the luminaires, after dousing the lamps, wait ten minutes before removing power to the luminaires. This will provide enough time for the equipment fan to cool off the unit.

On Natural Convection Cooled Units

- When lamps are lit, the interior and exterior heatsink of the luminaires becomes very hot. Naturally convection cooled units require longer to fully cool before being handled. Users should wait until the unit is cool to the touch before servicing or handling.

Lamp Life

- When operating arc lamps, allow luminaires to operate for at least 3 minutes. It takes about 3 minutes for the fill components (mercury and halogen-metal compounds) in the lamp tubes to vaporize completely. If the lamps are switched off earlier than 3 minutes, the fill components are partially vaporized. The inadequately vaporized fill components and the electrode material (tungsten) are deposited in the areas of the lamp tubes that have remained cool. As a result, the lamp tubes blacken prematurely and reduce the service life of the lamps.
- If system will be unattended for more than two hours, luminaire lamps should be doused. Standby mode should not be used for more than two hours.
- When the lamp is struck, the luminaire should be maintained in a horizontal position when not in use.

- For arc lamp luminaires, heads should be tilted horizontal before starting lamps. Lamps generate light by an electrical discharge arc, whereby the electrons from two electrodes excite the fill components to give off light. Because of the alternating current “position”, the electrons are alternately given off by the two electrodes. When a lamp is set in a vertical position, the halogen-metal compounds, which determine the color temperature of the lamp, collect at the top end of the glass envelope. When the lamp is started, color deviations occur since the concentration of halogen compounds is greater around the top electrode than the bottom electrode. In addition, the fill components that are difficult to vaporize congeal around the bottom electrode, thereby reducing lamp life.

Solid State Electronics

Electrostatic Discharge (ESD)

Electrostatic discharge (ESD) presents a significant danger to solid state electronic components (semiconductor devices and PC board assemblies). Static electricity can build on a variety of common objects (including people) simply by handling or moving. ESD rarely results in immediate failure of a component, but shows up later as an intermittent problem or severely reduces the life of the component. All VARI✻LITE equipment uses solid state electronics and appropriate precautions to protect them should be observed when servicing.

Printed Circuit Boards (PCBs)

All PC boards should be shipped in electrostatic shielding bags. When handling PC boards or components, devices such as conductive mats and conductive wrist straps should be used whenever possible. If these precautionary devices are not available, handling of PC boards and components should be avoided.

CAUTION: Black foam (used to package solid state electronics) should never be used for packing batteries or put in contact with PC boards which contain batteries.

Routine Maintenance

Lamp Replacement

To remove and replace lamp:

Step 1. Remove power from luminaire.

WARNING: Lamps will be extremely HOT after operation. Allow lamp to cool before replacing.

Step 2. Set the luminaire head horizontally.

Step 3. Engage service tilt lock to secure luminaire head in horizontal position to access heatsink latch.

Step 4. As shown in Figure A-1, at heatsink assembly, open latch and swing open back of luminaire.

CAUTION:
Ensure lamp is seated straight in socket before re-installing backcap.

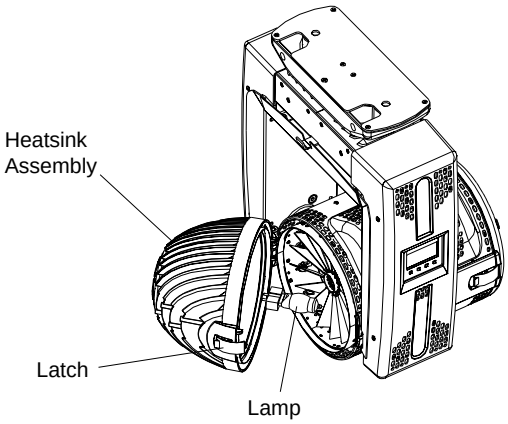

Figure A-1: Replacing Lamp

WARNING: Wear cotton gloves or other covering while servicing lamp. Touching lamp glass with bare fingers will leave oil and may cause the lamp to explode or reduce lamp life. If required, use alcohol and soft, lint-free cloth to thoroughly clean glass portion of lamp.

Step 5. Remove lamp by pulling straight out of socket.

Step 6. Carefully clean reflector with soft, lint-free cloth to remove dust and other debris.

Step 7. Install lamp by pressing firmly into socket. Ensure lamp is fully seated in socket with base of lamp against socket base.

Step 8. Close and re-latch back of luminaire.

Step 9. Disengage service tilt lock to allow luminaire head to move freely.

Step 10. Power luminaire and test.

Front Glass Replacement (VL550 / VL550D Models Only)

WARNING: Remove power from luminaire before performing maintenance.

Parts:
as needed (note, all lenses are sold separately):
GLASS, FRONT, CLEAR (Vari-Lite part: 42.9685.0201)
GLASS, FRONT, STIPPLE (Vari-Lite part: 42.9685.0207)
GLASS, FRONT, MED. FLOOD 8-ROW LENT (Vari-Lite part: 42.9685.0203)
GLASS, FRONT, MED. FLOOD 10-ROW LENT (Vari-Lite part: 42.9685.0206)
GLASS, FRONT, MED. FLOOD 12-ROW LENT (Vari-Lite part: 42.9685.0204)
GLASS, FRONT, VERY WIDE FLOOD - BUXOM (Vari-Lite part: 42.9685.0205)

To remove and replace front glass:

Step 1. Remove power from luminaire.

Step 2. At front ring assembly, open latch and swing open.

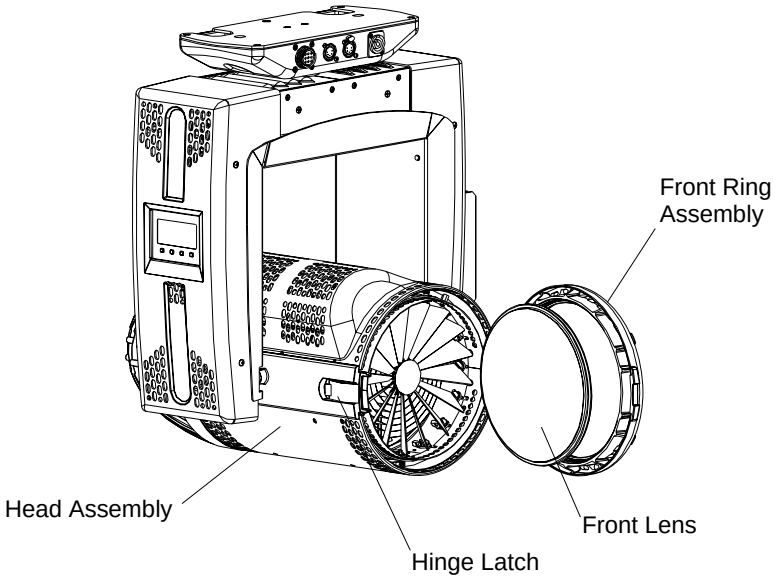

Figure A-2: Replacing Front Glass

CAUTION: Wear thick, protective gloves or other protective covering while handling front lens. The lens is extremely fragile and can break if too much force is applied. If dirty, clean with isopropyl alcohol and a soft, lint-free cloth.

Step 3. At front ring assembly, carefully press front side of lens inward with thumbs while holding ring with fingers until glass is free of holder. Remove lens.

WARNING: For VL550 and VL550D Wash luminaires, Clear and Stipple lenses may be installed curve in (concave) and all Lenticular (8-Row, 10-Row, and 12-Row) and Buxom lenses must be installed curve out (convex).

Step 4. Position new glass in front ring assembly. Be sure glass is fully and properly seated into rubber ring. See Table A-1, "Lens Mounting Orientation," below.

VL550 and VL550D Wash Luminaires Lens Orientation	
Clear Lens	Concave or Convex
Stipple Lens	Concave or Convex
8-Row Lens	Convex Only
10-Row Lens	Convex Only
12-Row Lens	Convex Only
Buxom Lens	Convex Only

Note: Concave = Bubble In / Convex = Bubble Out

Table A-1: Lens Mounting Orientation

Step 5. Close and latch front ring assembly.

Zoom Array Assembly Removal and Fixed Lens Mount / Lens Installation (VL550CD Models Only)

In the event you wish to remove the Zoom Array Assembly and install one of the six optional lenses (see "Parts:" list below), this procedure explains how to remove the entire zoom array assembly, install a VL550CD Fixed Lens Mount accessory (required to accommodate the lens) and the lens itself.

WARNING: Remove power from luminaire before performing this procedure.

Parts:

VL550CD FIXED LENS MOUNT ACCESSORY (Vari-Lite Part number: 21.9685.0380, sold separately)
as needed (note, all lenses are sold separately):
GLASS, FRONT, CLEAR (Vari-Lite part: 42.9685.0201)
GLASS, FRONT, STIPPLE (Vari-Lite part: 42.9685.0207)
GLASS, FRONT, MED. FLOOD 8-ROW LENT (Vari-Lite part: 42.9685.0203)
GLASS, FRONT, MED. FLOOD 10-ROW LENT (Vari-Lite part: 42.9685.0206)
GLASS, FRONT, MED. FLOOD 12-ROW LENT (Vari-Lite part: 42.9685.0204)
GLASS, FRONT, VERY WIDE FLOOD - BUXOM (Vari-Lite part: 42.9685.0205)

To remove and replace front glass:

Step 1. Remove power from luminaire. If necessary, allow unit to completely cool before proceeding.

Step 2. Luminaire should be placed on a steady, flat surface on sitting on upper enclosure.

Step 3. At head assembly, unlatch front lens array assembly as shown in Figure A-3.

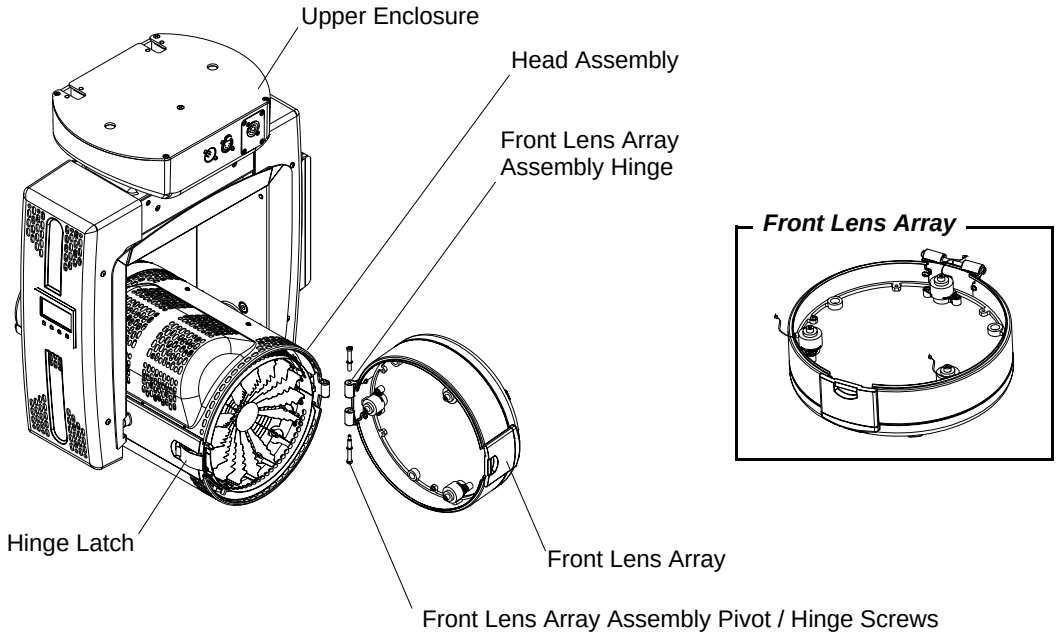

Figure A-3: Zoom Array Assembly Removal

Step 4. At rear side of lens array assembly, carefully disconnect each cable to lens array motors.

WARNING: Do not cut motor cables or wiring harness in luminaire!

Step 5. At front lens array hinge, using a flat screwdriver, carefully remove two pivot / hinge screws securing front lens array to luminaire head. Set front lens array aside on a protective surface. For future use, be sure to wrap front lens array assembly in appropriate protective material.

Note: It is important to follow the next step carefully before installing a front lens.

Step 6. Store and dress motor cables as follows:

a. At luminaire head, remove top head cover (as indicated in Figure A-4) by removing two (or four, depending on production date) 6-32x1/4" PPB SEMS screws. Set aside.

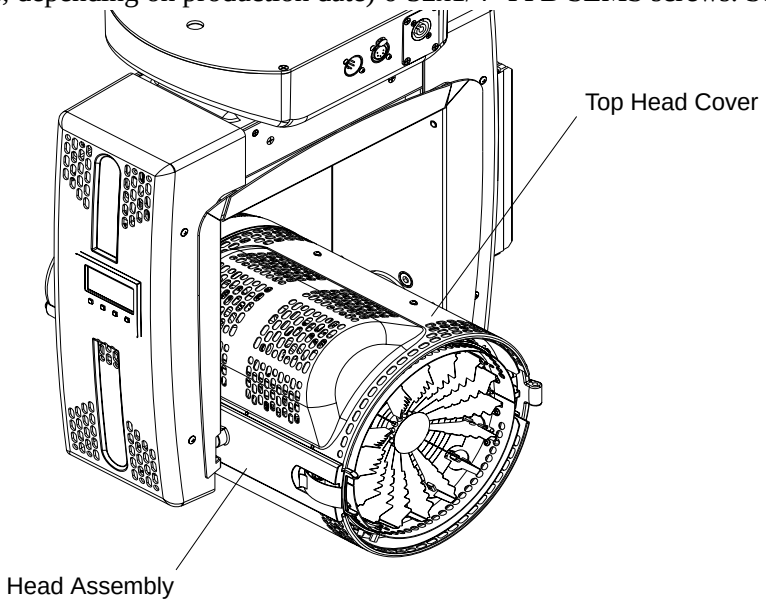

Figure A-4: VL550CD Luminaire Head Cover

b. Find a suitable location to secure cables (using a tie wrap) away from all moving mechanisms in luminaire.

c. Carefully pull motor cables into head assembly and secure. Be sure to cut tie wrap end after securing cables so it does not interfere with moving mechanisms.

d. Reinstall head cover.

Step 7. At luminaire head assembly, install fixed lens mount accessory (Vari-Lite part number 21.9685.0380) using two pivot / hinge screws removed in Step 5. Note, install VL550CD fixed lens mount accessory before installing front lens.

a. As illustrated in Figure A-5, position fixed lens mount to mate with luminaire head hinge.

b. Insert pivot / hinge screws through fixed lens mount accessory through luminaire head hinge. Tighten screws.

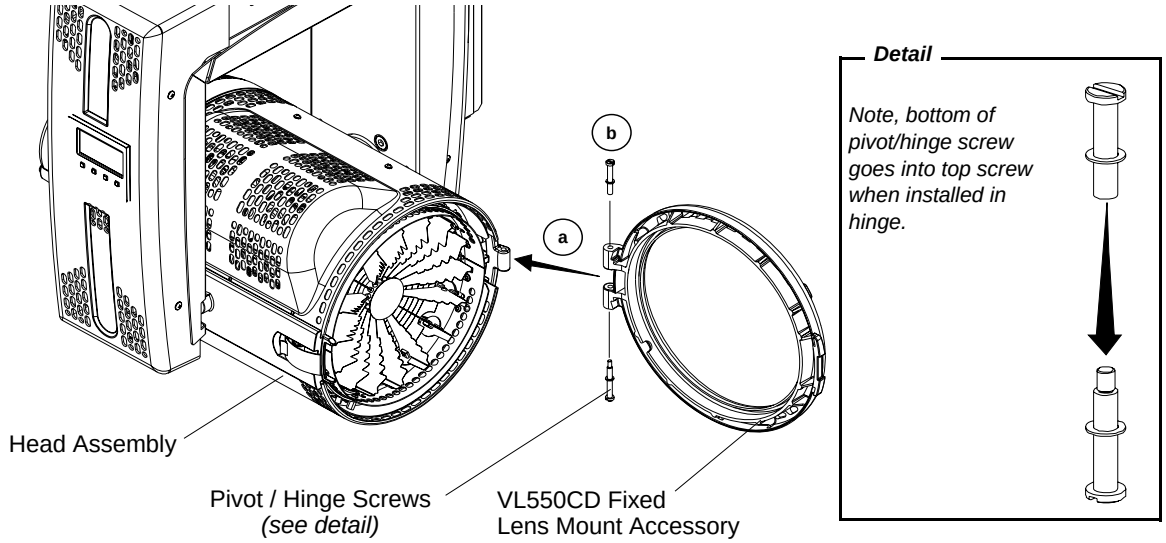

Figure A-5: VL550CD Fixed Lens Mount Accessory Installation

CAUTION: Wear thick, protective gloves or other protective covering while handling front lens. The lens is extremely fragile and can break if too much force is applied. If dirty, clean with isopropyl alcohol and a soft, lint-free cloth.

Step 8. Install front lens as follows:

a. Any lens must be installed CONVEX (bubble side out, away from luminaire head assembly).

Note: The fixed lens mount accessory contains a rubber gasket. Be sure gasket is properly seated in front lens mount before installing lens and is not damaged in next step.

b. Carefully press rear side of lens towards fixed lens mount accessory with fingers until glass is securely in place.

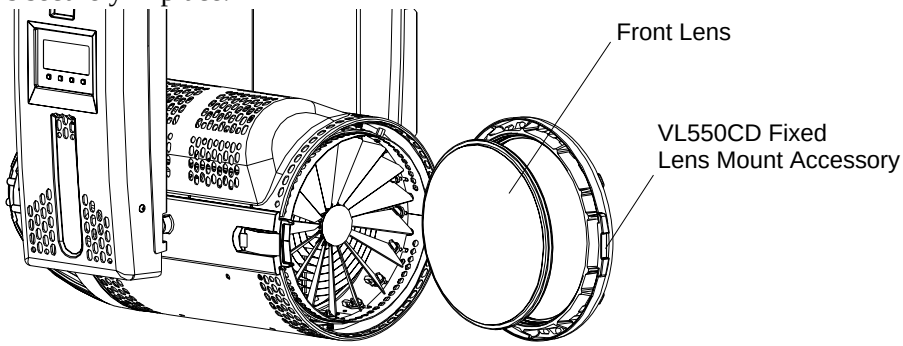

Figure A-6: Front Lens Installation

Step 9. Clean front and rear of lens (if required).

Step 10. Close front lens mount and latch. Luminaire is ready for use.

Cleaning Optical Lenses and Filters

WARNING: Remove power from luminaire before performing maintenance.

WARNING: Acetone is a harsh cleaning agent and solvent. Acetone is very flammable. Please handle acetone according to manufacturer's safety instructions and precautions.

The front lens, optics/color filters, and reflector may require cleaning after extended use.

- FRONT LENS: Use a isopropyl alcohol with a soft, lint-free cloth to clean the front lens.
- OPTICS/COLOR FILTERS: Use Acetone or Isopropyl Alcohol along with a soft, lint-free cloth to clean the optics/color filters.
- REFLECTOR: Use Acetone or Isopropyl Alcohol along with a soft, lint-free cloth to clean the reflector.

CAUTION: Do not continuously rub color filters or reflector - it may damage or remove the optical coating.

APPENDIX B.

Technical Specifications

Mechanical

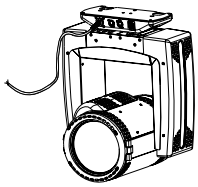

VL550 Wash

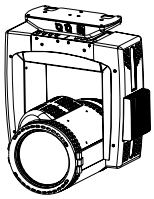

VL550D Wash

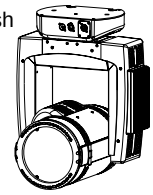

VL550CD Wash

Color

Enhanced DICHRO✻TUNE radial color changing mechanism featuring independent blue, amber, and magenta color control capable of smooth, timed color crossfades or changes.

Pastel (Dichroic Glass) Option:

As an option, all versions of the VL550 wash luminaire are available with “pastel” or lighter colored cyan and magenta color filters. VL550 wash luminaires fitted with pastel-colored dichroic glass maintain the electrical specifications of the standard version of the VL550 wash.

Intensity Control

- VL550 and VL550D models offer an optional integral dimmer or may be dimmed with a customer supplied external dimmer.
- VL550CD models are supplied with an internal mechanical douser.

Beam Control

- In VL550 and VL550D models, a selection of six, easily interchangeable front lenses provide a variety of beam size and shape options. In the VL550 and VL550D fixtures, an internal, variable diffuser mechanism provides additional beam control. With stipple lens in place and adjustment of diffusion, beam angle is capable of variance from 8-24°.
- The VL550CD contains a patented zoom optical system with continuously variable field angle from approximately 22° to 80°.

Pan and Tilt

Smooth, time-controlled continuous motion by way of a three-phase stepper motor system. Range: Pan - 540° , Tilt - 270°.

Pan/Tilt Accuracy

0.3° resolution.

Weight

- VL550: 43 lbs (19.5 kg)
- VL550D: 48 lbs. (21.8 kg)
- VL550CD: 55 lbs. (24.9 kg)

Spacing

Refer to illustration on page 19.

Optical

Source

Model	Lamp	Color Temperature
VL550 (120V)	Tungsten, 120V, 1200W	3200K
VL550 (230V)	Tungsten, 230V, 1000W	3200K
VL550D (120V)	Tungsten, 120V, 1200W	3200K
VL550D (230V)	Tungsten, 230V, 1000W	3200K
VL550CD	Ceramic Discharge, 315W	3200K

Reflector

Precision glass reflector with dichroic cold mirror coating.

Lens and Lens Options

- VL550 and VL550D models: Factory lens is a stipple. Accepts standard Par 64 cover lenses (optional - *Clear, 8-Row Lenticular, 10-Row Lenticular, 12-Row Lenticular, and Buxom*).
- VL550CD models have a patented zoom optical system with continuously variable field angle from approximately 22° to 80°.

* Nominal Values

Operational

Power Requirements

Model	Lamp	Operating Voltage
VL550	Tungsten, 120V, 1200W	90 - 120VAC, 50/60Hz
	Tungsten, 230V, 1000W	216 - 230VAC, 50/60Hz
VL550D	Tungsten, 120V, 1200W	90 - 120VAC, 50/60Hz
	Tungsten, 230V, 1000W	216 - 264VAC, 50/60Hz
VL550CD	Ceramic Discharge, 315W	100 - 240VAC, 50/60Hz

Note:

Current draw depends on input voltage. For specific current draw, please refer to "Current vs. Voltage" on page 11.

Operational Temperature

-20° to 122°F (-29° to 50°C)

Cooling

Natural convection cooled supported by on-demand micro fans for higher-temperature applications.

Control

Compatible with a wide variety of DMX consoles.

DMX Channels

8 - 13 channels depending upon mode selected.

Mounting Position

The luminaire can be mounted and operated in any orientation.

* Nominal Values

Photometric

VL550 / VL550D - 1200W, 120V Tungsten Lamp (3200K Color Temperature)						
Lens	**Lumens**	**CANDELA** (cd)	**Foot Candles** (fc)	**Lux** (lx)	**Beam Angle** (degrees)	**Field Angle** (degrees)
Clear	6,010	377,632	2,516	27,143	6.5	14.0
Stipple	6,140	284,791	2,544	27,467	7.9	16.2
8-Row	4,680	93,761	1,163	12,489	12.9	19.0
10-Row	4,940	92,573	1,377	14,812	12.2	20.8
12-Row	3,400	30,358	941	10,143	18.6	30.0
Buxom	3,040	29,153	1,868	20,245	24.2	43.3

VL550 / VL550D - 1000W, 230V Tungsten Lamp (3200K Color Temperature)						
Lens	**Lumens**	**CANDELA** (cd)	**Foot Candles** (fc)	**Lux** (lx)	**Beam Angle** (degrees)	**Field Angle** (degrees)
Clear	4,790	343,614	1,978	21,263	6.4	13.0
Stipple	4,910	239,961	1,955	21,004	7.8	15.6
8-Row	3,820	78,833	973	10,500	14.2	19.0
10-Row	4,170	73,418	1,092	11,747	14.9	20.8
12-Row	2,730	25,623	762	7,997	19.7	29.1
Buxom	2,210	25,532	1,447	15,583	22.2	39.4

VL550CD - 315W, Ceramic Discharge Lamp (3200K Color Temperature) - *Preliminary*						
Lens *(Array Lens)*	**Lumens**	**CANDELA** (cd)	**Foot Candles** (fc)	**Lux** (lx)	**Beam Angle** (degrees)	**Field Angle** (degrees)
Narrow Mode	3,600	87,000	1,460	15,710	11	22
Wide Mode	3,844	3,760	1,355	14,580	52	84

TECHNICAL SUPPORT

GLOBAL 24HR TECHNICAL SUPPORT:

Call: +1 214 647 7880
entertainment.service@signify.com

NORTH AMERICA SUPPORT:

Call: 877-VARI-LITE (877-827-4583)
entertainment.service@signify.com

EUROPEAN CUSTOMER SERVICE CENTER:

Call: +31 (0) 543 542 531
entertainment.europe@signify.com

©2023 Signify Holding. All rights reserved.
All trademarks are owned by Signify Holding or their respective owners. The information provided herein is subject to change, without notice. Signify does not give any representation or warranty as to the accuracy or completeness of the information included herein and shall not be liable for any action in reliance thereon. The information presented in this document is not intended as any commercial offer and does not form part of any quotation or contract, unless otherwise agreed by Signify. Data subject to change.

vls_copyright